Assembly and operating instructions

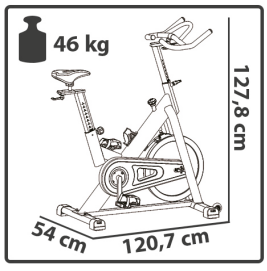

DFSC30.01.02

Dear Customer,

Thank you for deciding for a high-quality training equipment of the brand Darwin, the brand that makes athlete's hearts beat faster. Darwin offers a wide range of home fitness equipment like elliptical cross trainers, ergometers, treadmills and rowing machines. Darwin equipment is the optimal equipment for all those who want to train at home independent of goals and fitness level. For further information please visit www.sport-tiedje.com.

SAFETY NOTICE

Please read all of the instructions carefully before assembly and first use. These instructions are intended to ensure speedy assembly and explain safe usage. Make sure that all people exercising with the equipment (in particular children and persons with limited physical, sensory, mental or motor capabilities) are informed about these instructions and its content in advance. In case of doubt, a responsible person must supervise the use of the equipment.

This equipment has been manufactured according to the latest safety knowledge. As far as possible, potential safety hazards which could cause injury have been eliminated. Make sure to follow the instructions carefully and that all parts are securely in place. If required, read through the instructions again to correct any mistakes.

Please pay close attention to the safety and maintenance instructions given here. The contract partner cannot be held liable for damage to health, accidents or damage to the equipment when it is not used in accordance with these instructions.

The equipment is only suitable for home use. It is not suitable for semi-professional use (e. g., hospitals, clubs, hotels, schools, etc.) and commercial or professional use
(e. g., commercial gyms).

Retain these instructions in a safe place for future reference, maintenance or when ordering replacement parts.

CONTENTS

1	GENERAL INFORMATION	5
1.1 Technical data		5
1.2 Personal safety		5
1.3 Set-up place		6
2	ASSEMBLY INSTRUCTIONS, MAINTENANCE AND CARE	7
2.1 General instructions		7
2.2 Faults and troubleshooting		8
2.3 Maintentance and service calendar		8
3	ASSEMBLY	9
3.1 Assembly instructions		9
3.2 Adjustments		13
4	WARRANTY INFORMATIONEN	15
5	DISPOSAL	17
6	ORDERING ACCESSORIES	17
7	ORDERING SPARE PARTS	18
7.1 Service hotline		18
7.2 Serial number and model name		18
7.3 Parts list		19
7.4 Exploded drawing		21

1 GENERAL INFORMATION

1.1 Technical data

Packaging dimensions (L x W x H): approx. 107.5 cm x 19.5 cm x 93 cm
Set-up dimensions (L x W x H): approx. 120.7 cm x 54 cm x 127.8 cm

Maximum user weight: 125 kg

1.2 Personal safety

+ Before you start using the equipment, you should consult your physician that this type of exercise is suitable for you from a health perspective. Particularly affected are persons who: have a hereditary disposition to high blood pressure or heart disease, are over the age of 45, smoke, have high cholesterol values, are overweight and/or have not exercised regularly in the past year.
+ Please note that working out excessively can seriously damage your health.
+ The equipment may only be used for its intended purpose; that means for indoor cycle training of adult persons.
+ Any other usage is prohibited and potentially dangerous. The contract partner cannot be held liable for damage resulting from improper use.
+ The equipment is strictly for use by one person at a time.
+ Children should not be allowed unsupervised access to the equipment.
+ Before starting your training, make yourself familiar with all of the equipment's functions and setting options. Have an expert explain the correct usage of the product to you.
+ Keep your hands and other objects well clear of moving parts.
+ Do not turn the pedal cranks manually. Keep your hands well clear of the drive mechanism.
+ Make sure that nobody is in the range of motion of the equipment while exercising.
+ Keep your hands, feet and other body parts, hair, clothing, jewellery and other objects well clear of moving parts.
+ During use, wear suitable sports clothing rather than loose or baggy clothing. When selecting sports shoes, think about the suitability of the sole – preferably this should be made of rubber or other non-slip materials. Shoes with heels, leather soles, studs or spikes are not suitable. Never work out in bare feet.
+ At the first signs of weakness, nausea, dizziness, pain, difficulty in breathing or other abnormal symptoms, stop your workout immediately and, if necessary, consult your physician.

1.3 Set-up place

+ The equipment should only be used indoors, in a sufficiently heated and dry area (ambient temperature between 10°C and 35°C). The equipment should not be used outdoors or in rooms with high humidity (over 70%) like swimming pools. The equipment should only be stored in surroundings with an ambient temperature between 5°C and 45°C.
+ The training room should be well ventilated during the training and not be exposed to any draughts.
+ Choose a location in which to place the equipment such that there is enough free space/clearance to the front, the rear and to the sides of the equipment (at least 1.50 metre). Furthermore, the equipment should not be set up in main entrances or on escape routes.
+ No objects of any type should be inserted into the openings of the equipment.
+ The equipment should be placed on a level and solid surface, any unevenness in the floor should be levelled out.
+ A floor protective mat/equipment underlay can help to protect high-quality floor coverings (parquet, laminate, cork, carpets) from dents and sweat and can help to level out slight unevenness.

2.1 General instructions

+ Please check if all parts and tools belonging to the equipment are included in the delivery and if there is any transport damage. If there are any complaints, please contact your contract partner directly.
+ Some of the nuts and bolts to be used in assembly are already pre-mounted in order to make set-up as easy as possible.
+ The equipment must be assembled by adults. In case of doubt, ask for assistance from another person with technical skills.
+ Keep children away from the equipment during assembly, because small parts are included in the delivery and may be swallowed.
+ Make sure that you have enough space (at least 1.50 metres) in every direction during assembly.
+ Do not leave any tools and packaging materials like plastic sheeting laying around to avoid danger of suffocation for children.
+ Assemble the equipment on an underlay mat or on the cardboard packaging in order to avoid damage to the equipment and to the floor (scratches).
+ Before starting assembly, all individual parts should be placed on the floor next to each other.
+ Read the assembly instructions carefully and assemble the equipment according to the illustrations. Proceed carefully and cautiously.
+ First loosen all parts and check for their correct fitting. Then tighten the screws using a tool.
+ Modifications to the design or improper repairs may pose a hazard to the user and should not be carried out. The product warranty may be void as a result.
+ Only authorised service technicians are permitted to carry out all servicing and/or repairs – it excludes maintenance and care.
+ Damaged or worn components may impair your safety and the lifespan of the equipment. You should therefore immediately replace damaged or worn components. Please contact your contract partner in such a case. The equipment should no longer be used until it has been repaired. When needed, only use original Darwin spare parts.
+ Check the tightness of all screw connections once a month.
+ In order to be able to guarantee the constructively defined safety level of this equipment, we recommend having the equipment regularly maintained (at least once a year) by specialists (service technicians of your contract partner).
+ The equipment may be cleaned of dust, dirt, and sweat using a damp cloth. The use of solvents should be strictly avoided. Also, make sure that no liquids (i. e., sweat) get into the openings of the equipment.

2.2 Faults and troubleshooting

The equipment runs through regular quality controls during production. Nevertheless, errors or malfunctions on the equipment may occur. Individual parts are often the cause of faults and a replacement is usually sufficient. Please use the following overview to see the most common errors and how to repair them. If the equipment still does not work properly, please contact your contract partner.

Error	Cause	Solution
Squeaking or cracking noise	Loose or too fixed screw joint	Check screw joint or lubricate
Cracking in the pedals	Loose pedals	Tighten pedals
Machine is wobbling	Machine is not levelled	Align feet
Handlebar/saddle is wobbling	Loose screws	Tighten screws

2.3 Maintenance and service calendar

The indoor cycle has to be cleaned with a moist towel (no solvents!) after every training session in order to avoid any damages from body perspiration. The following routine works have to be done in the given intervals:

Part	Weekly	Monthly	2x a year	Annually
Check screws		I		
Check the brake for wear and lubricate if required	I			
Lubricate saddle and seat post with silicone gel		I		
Check the belt tension		I		

3.1 Assembly instructions

A. Make sure that there is enough space around the indoor cycle.
B. Use the Benutzen Sie das vorgegebene Werkzeug zum Aufbau.
C. Check if there are any parts missing or damaged (use the exploded drawing and the parts list).

Step 1:

Assemble the front stabilizer (15) to the main frame (16) using mit two flat washers (5), two domed nuts (6) and two carriage bolts (3).

Assemble the rear stabilizer (4) to the main frame (16) using two flat washers (5), two domed nuts (6) and two carriage bolts (3).

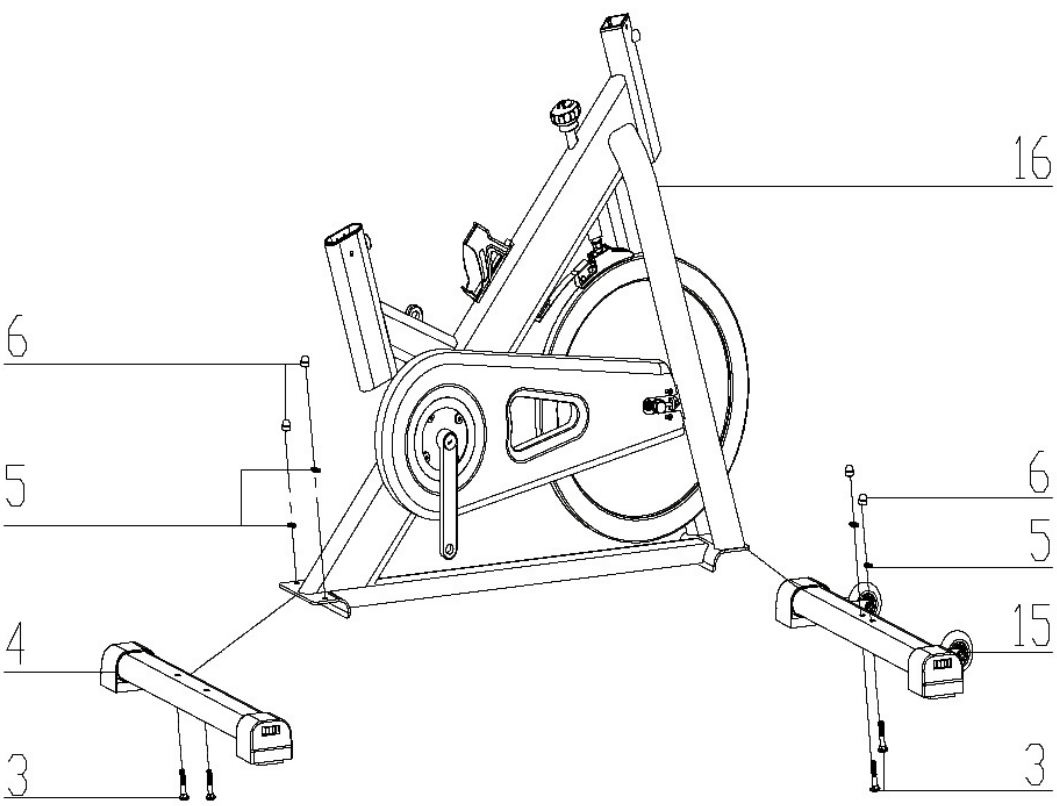

Step 2:

Put the vertical seat post (10) into the oval tube of the main frame (16). Fix the vertical seat post (10) with the spring adjustment knob (7). Now put the seat post (12) on the vertical seat post (10) and fix it with the flat washer (22) and the L shape knob (23). You can adjust the seat height after you are done with the assembly.

Now assemble the seat (13) to the seat post (12) like shown in the figure below. Tighten the screws underneath the seat.

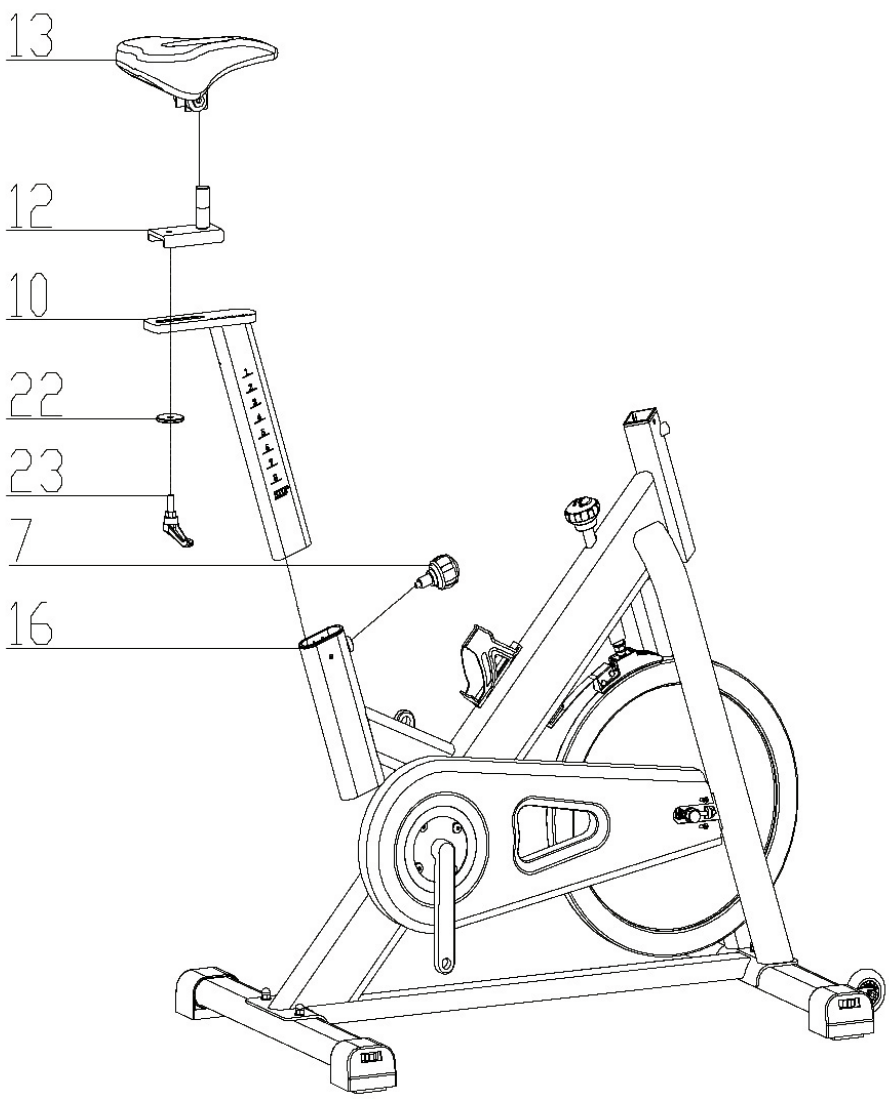

Step 3:

Put the handlebar post (17) into the square tube of the main frame (16).

loosen the L shape knob (19) and pull it backwards. Now bring the handlebar post (17) to the desired height. Let go of the L shape knob (19) again and make sure that it is engaged in one of the pre-drilled holes of the handlebar post (17). Now tighten the L shape knob (19) again.

Assemble the handlebar (18) to the handlebar post using the flat washer (22) and the L shape knob (23).

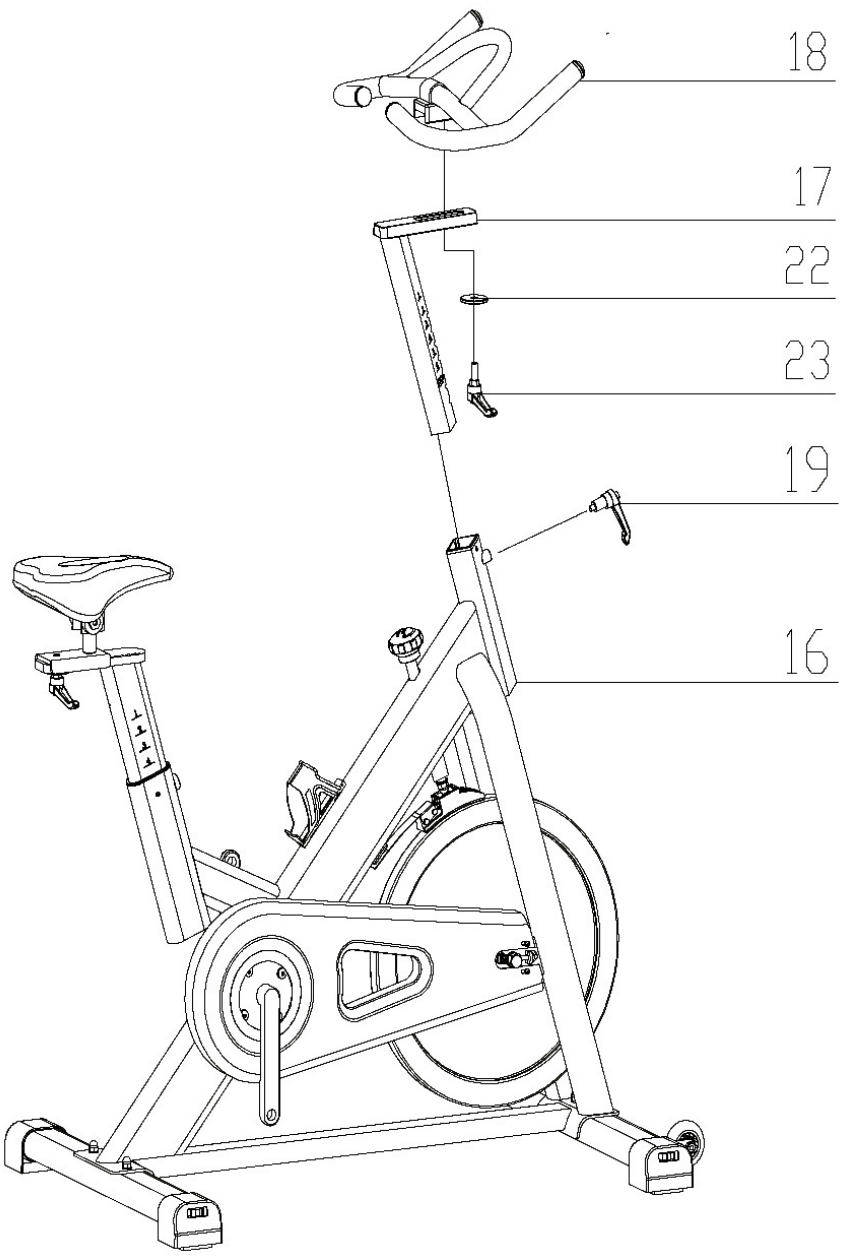

Step 4:

The pedals (1 L and 1 R) are marked with „L“ (left) and „R“ (right). Assemble the pedals to their respective crank arms (see figure).

Please note that the right pedal needs to be screwed in by turning it clockwise and the left pedal counterclockwise.

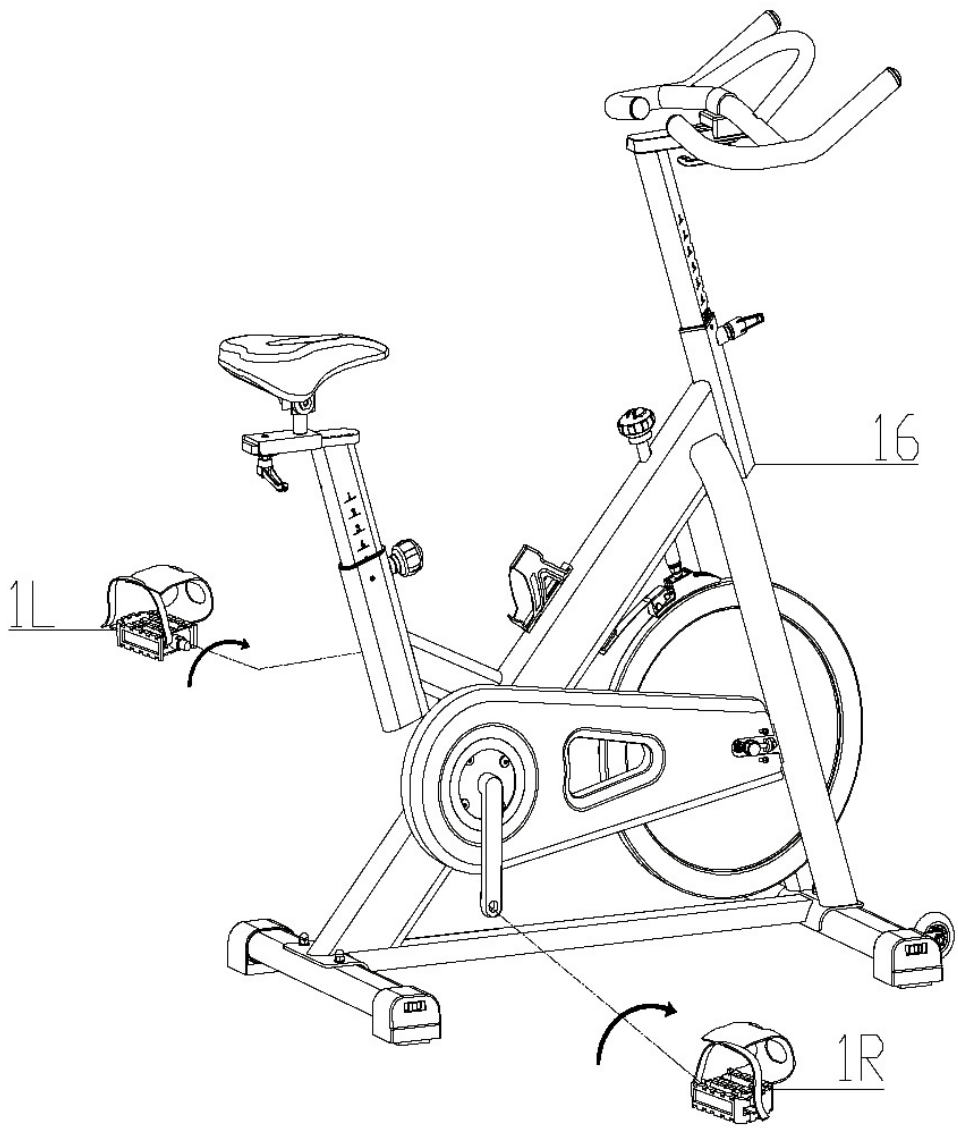

3.2 Adjustments

Adjusting the brake resistance:

The brake resistance can be adjusted with the knob (30). To increase the brake resistance turn the knob (30) clockwise. To decrease the brake resistance turn the knob (30) counterclockwise.

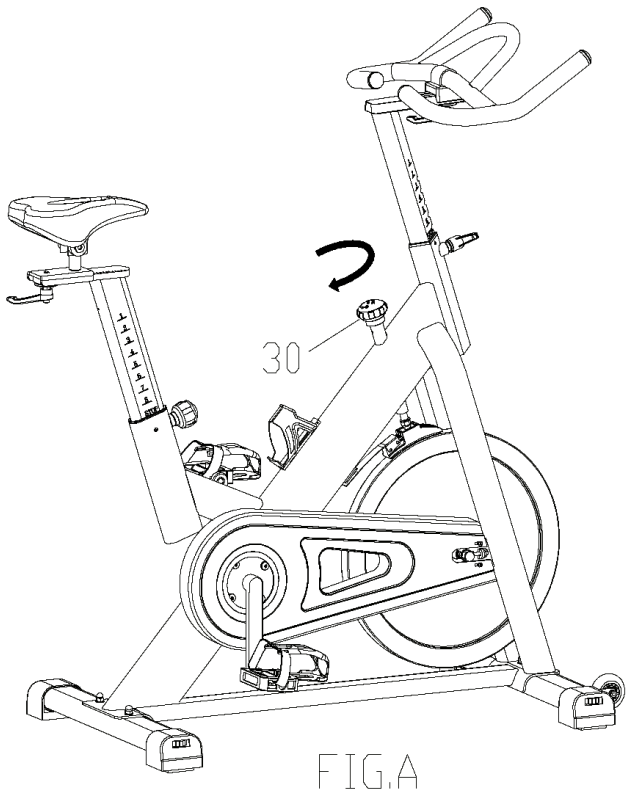

Emergency brake:

The same knob (30) that is used to adjust the brake resistance is also responsible for the emergency brake.
Use this function whenever it is necessary to stop the flywheel or to get off the indoor cycle immediately.

To use the emergency brake simply press down the knob (30) (see figure).

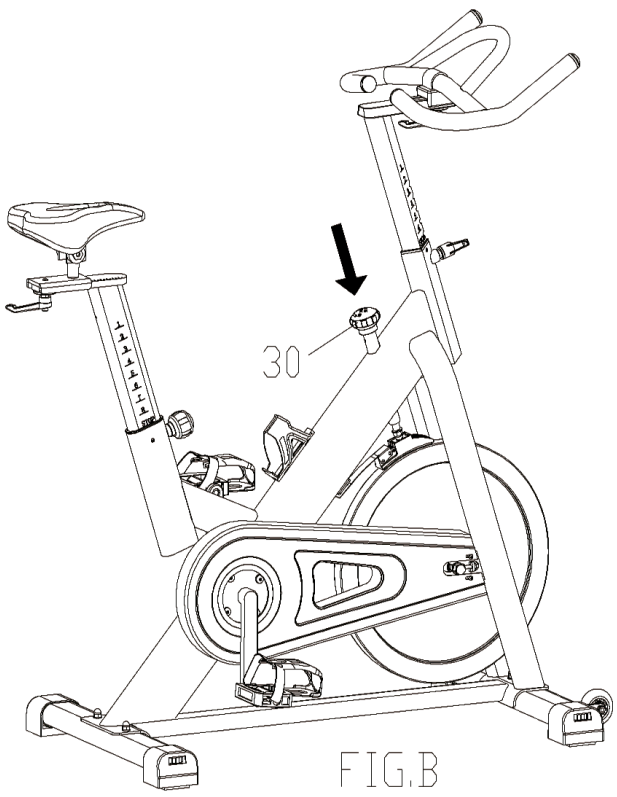

Adjusting the handlebar:

1. To adjust the height of the handlebar, loosen the L shape knob (19) and pull it backwards. Now bring the handlebar post (17) to the desired height. Let go of the L shape knob (19) again and make sure that it is engaged in one of the pre-drilled holes of the handlebar post (17). Now tighten the L shape knob (19) again.

2. To adjust the handlebar horizontally, loosen the L shape knob (23) and pull it downwards. Now bring the handlebar (18) to the desired position. Let go of the L shape knob (23) again and make sure that it is engaged in one of the pre-drilled holes of the handlebar post (17). Now tighten the L shape knob (23) again.

Adjusting the seat

1. To adjust the height of the seat, loosen the spring adjustment knob (7) and pull it out slightly. Now bring the vertical seat post (10) to the desired height. Let go of the spring adjustment knob (7) and make sure that it is engaged in one of the pre-drilled holes of the vertical seat post (10). Now tighten the spring adjustment knob (7) again.

2. To adjust the seat horizontally, loosen the L shape knob (23) and pull it down slightly. Now bring the seat post (12) and the seat (13) to the desired position. Let go of the L shape knob (23) and be sure it is engaged in one of the pre-drilled holes of the seat post (12). Now tighten the L shape knob (23) again.

CAUTION

- **For safety reasons please refrain from pedaling backwards when a brake resistance is set.**
- **This indoor cycle is NOT equipped with a free wheel system. That means: When the flywheel is rotating, the pedals rotate as well. In order to avoid any knee injuries, do not try to stop the equipment by applying a backwards pressure on the pedals. Also, do not try to take off your feet from the rotating pedals. The movement can only be stopped by using the emergency brake or by a controlled reduction of the pedal frequency.**

4 WARRANTY INFORMATION

Darwins's fitness equipment is subject to strict quality controls. However, if a fitness equipment purchased from us does not work perfectly, we take it very seriously and ask you to contact our customer service as indicated. We are happy to help you by phone via our service hotline.

Error descriptions
Your fitness equipment is developed for long-term, high-quality training. However, should a problem arise, please first read the operating instructions. For further assistance, please contact your contract partner or call our service hotline. To ensure your problem is solved as quickly as possible, please describe the defect as exactly as possible.

In addition to the statutory warranty, we provide a warranty for every fitness equipment purchased from us according to the following provisions.

Your statutory rights are not affected.

Warrantee
The warrantee is the first/original buyer and/or any person who received a newly purchased product as a gift from the original buyer.

Warranty periods
The following warranty periods begin on delivery of the fitness equipment.

Model	Usage	Full warranty
EVO30	Home use	24 months

Repair cost
According to our choice, there will either be a repair, a replacement of individual damaged parts or a complete replacement. Spare parts, that have to be mounted while assembling the equipment, have to be replaced by the warrantee personally and are not a part of repair. After the expiration of the warranty period for repair costs, a pure parts warranty applies, which does not include the repair, installation and delivery costs.

The terms of use are defined as follows:

- Home use: solely for private use in private households up to 3 hours per day
- Semi-professional use: up to 6 hours per day (e. g. rehabilitation centers, hotels, clubs, company gyms)
- Professional use: more than 6 hours per day (e. g. commercial gyms)

Warranty service
Within the warranty period, equipment which develops faults as a result of material or manufacturing defects, will be repaired or replaced at our discretion. Ownership of equipment or parts of equipment which have been replaced is transferred to us. The warranty period is not extended nor does a new warranty period begin following repair or replacement under the warranty.

Warranty conditions
For the warranty to be valid, the following steps must be taken:

Please contact our customer service by email or phone. If the product under warranty has to be sent in for repair, the seller bears costs. After expiry of the warranty, the buyer bears the costs of transport and insurance. If the fault is covered by our warranty, you will receive a new or repaired equipment in return.

Warranty claims are invalid in case of damage resulting from:
- misuse or improper handling
- environmental influences (moisture, heat, electrical surge, dust, etc.)
- failure to follow the current safety measures for the equipment
- failure to follow the operating instructions
- use of force (e. g. hitting, kicking, falling)
- interventions which were not carried out by one of our authorized service centers
- unauthorized repair attempts

Proof of purchase and serial number
Please make sure that you are able to provide the appropriate receipt when claiming on your warranty. So that we can clearly identify the model of your equipment, and for the purposes of our quality control, you will need to give the serial number of your equipment, when contacting the service team. Where possible please have your serial number and your customer number ready when you call our service hotline. It will help us to deal with your request swiftly.

If you cannot find the serial number on your fitness equipment, our service team is at your disposal to offer further information.

Service outside of the warranty period
We are also happy to issue an individual cost estimate if there is a problem with your fitness equipment after the warranty has expired, or in cases which do not fall under the terms of the warranty, e. g. normal wear and tear. Please contact our customer service team to find a quick and cost-effective solution to your problem. In such a case you will be responsible for the delivery costs.

Communication
Many problems can be solved just by speaking to us as your specialist supplier. We know how important it is to you as a user of the fitness equipment to have problems solved quickly and simply, so you can enjoy working out with minimal interruption. For that reason, we also want to resolve your queries quickly and in a straightforward manner. Thus, please always keep your customer number and the serial number of the faulty equipment handy.

5 DISPOSAL

At the end of its operational life, this equipment cannot be disposed of in normal household waste. Instead, it must be disposed of via an electricals recycling centre. Further information can be obtained from your local authority's recycling service.

The materials can be recycled as per their symbols. Through the reuse, recycling of materials or other forms of recovery of old equipment, you make an important contribution to the protection of the environment.

6 ORDERING ACCESSORIES

	Protective Mat size L ArtNo. ST-FM-L
	Fitness Equipment care kit ArtNo. HF-500
	SPD combi pedal system ArtNo. TF-SPD

7.1 Service hotline

So that we can give you the best possible service, please have your **model name, part number, serial number, exploded drawing and parts list** ready.

SERVICE HOTLINE

DE

+49 4621 4210-0
+49 4621 4210-699
service@sport-tiedje.de
Mo. - Fr. 8:00 - 18:00
Sa. 9:00 - 18:00

DK

80 90 16 50
+49 4621 4210-945
info@t-fitness.dk
Ma. - Fr. 8:00 - 18:00
Lø. 9:00 - 18:00

FR

+33 (0) 172 770033
+49 4621 4210-933
service-france@sport-tiedje.fr
Lun. - Ven. 8:00 - 18:00
Sam. 9:00 - 18:00

NL

+31 172 619961
info@fitshop.nl
Ma. - Do. 9:00 - 17:00
Vr. 9:00 - 21:00
Za. 10:00 - 17:00

UK

+44 141 876 3972
orders@powerhousefitness.co.uk
Mon. - Fri. 9:00 - 17:00

INT

+49 4621 4210-0
service-int@sport-tiedje.de
Mon - Fri 8:00 - 18:00
Sat 9:00 - 18:00

7.2 Serial number and model name

Before assembling your equipment, find the serial number on the white sticker and enter it in the appropriate space.

Serial number:

Brand / category:	Model name:
Darwin / Indoor cycle	EVO30

7.3 Parts list

No.	Description	Qty.	No.	Description	Qty.
1L	PEDAL L	1	31	LOCK NUT	6
1R	PEDAL R	1	32	TWIST THE FIXINGS	1
2	END CAP1	4	33	LEFT CRANK	1
3	CARRIAGE BOLT	4	34	CRANK COVER	1
4	REAR STABILIZER	1	35	BEARING	2
5	FLAT WASHER	4	36	RIGHT CRANK	1
6	DOMED NUT	4	37	NUT	2
7	SPRING ADJUSTMENT KNOB	1	38	FIXING NUT 2	2
8	PLASTIC SLEEVE 1	1	39	FIXING BOLT	2
9	BOLT 1	1	40	NUT	2
10	VERTICAL SEAT POST	1	41	SCREW 1	13
11	END CAP 2	1	42	SCREW 2	7
12	SEAT POST	1	43	SCREW 3	2
13	SEAT	1	44	OUTER CHAIN COVER	1
14	FLAT WASHER	3	45	LITTLE CHAIN COVER	1
15	FRONT STABILIZER	1	46	AXIS	1
16	MAIN FRAME	1	47	LONG FIXING TUBE	1
17	HANDLEBAR POST	1	48	SHORT FIXING TUBE	1
18	HANDLE BAR	1	49	INNER CHAIN COVER	1
19	L SHAPE KNOB	1	50	BELT	1
20	B0TTLE HOLDER	1	51	BELT WHEEL	1
21	PLASTIC SLEEVE 2	1	52	WASHER 2	3
22	FLAT WASHER 1	2	53	SPRING 1	1
23	L SHAPE KNOB	2	54	SCREW ROD	1
24	END CAP 3	1	55	BOLT	2
25	FLAT WASHER2	1	56	PU WHEEL	2
26	BOLT 2	2	57	BEARING	4
27	BOLT	4	58	FIXING NUT 2	2
28	FIXING NUT 1	2	59	FIXING TUBE	1
29	CRANK END CAP	2	60	BEARING	2
30	KNOB	1	61	FLYWHEEL	1

No.	Description	Qty.	No.	Description	Qty.
62	FLYWHEEL SHAFT	1	69	SPRING 3	1
63	SPRING WASHER 1	2	70	PLASTIC FRAME	1
64	DOMED NUT	1	71	LITTLE PLASTIC	1
65	LOCK NUT	2	72	SPRING BRAKE	1
66	FIXING NUT	2	73	WOOLLY BLOCK	1
67	FLYWHEEL COVER	1	74	BOLT 1	2
68	SPRING COVER	1	75	WASHER 4	1

7.4 Exploded drawing

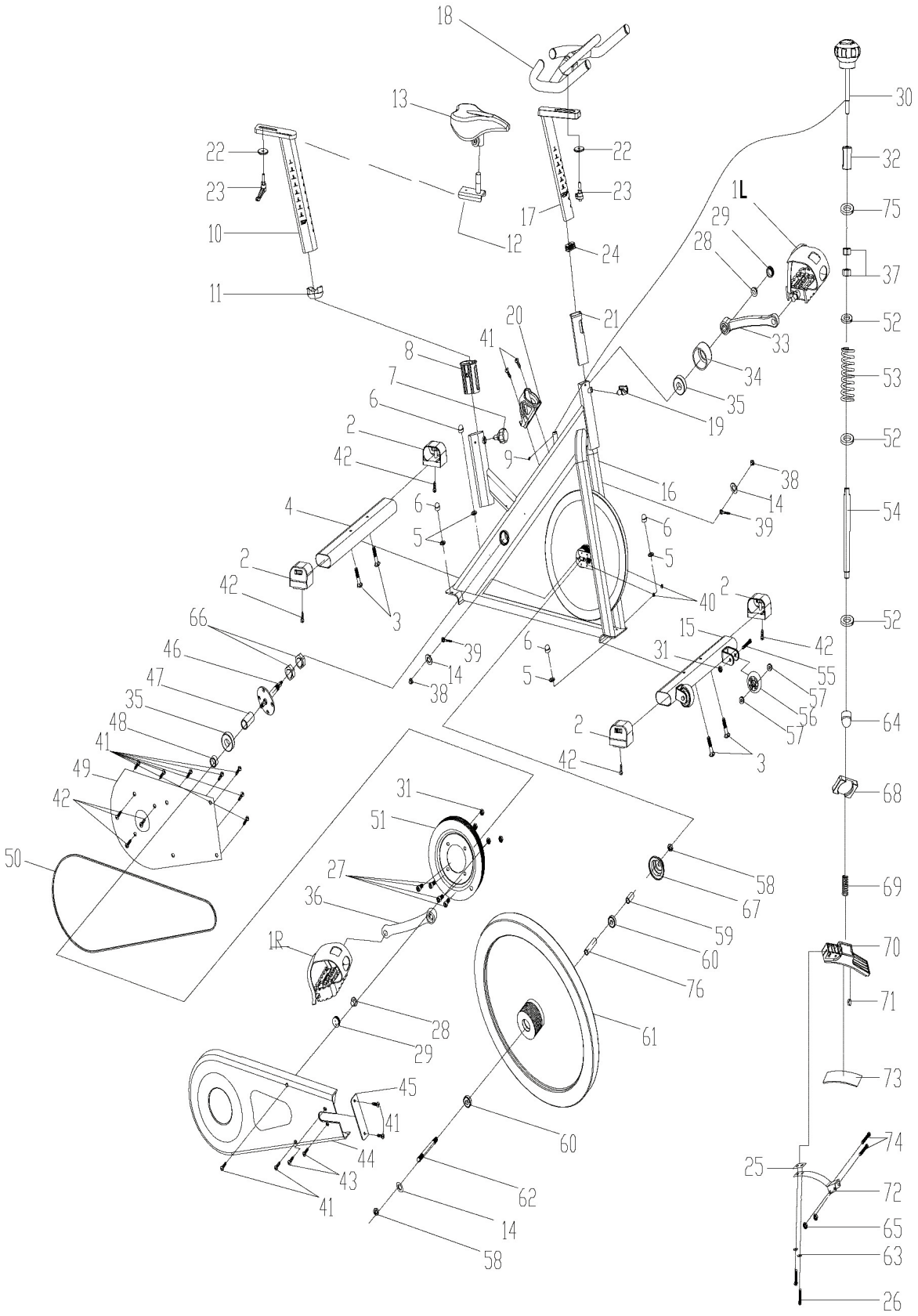

CONTACT

Company head office
Sport-Tiedje GmbH
Flensburger Str. 55
24837 Schleswig

DE
+49 4621 4210-0
+49 4621 4210-698
technik@sport-tiedje.de

DK
80 90 16 50
+49 4621 4210-945
info@t-fitness.dk

FR
+33 (0) 172 770033
+49 4621 4210-933
service-france@sport-tiedje.fr

NL
+31 172 619961
info@fitshop.nl

UK
+44 141 876 3986
support@powerhousefitness.co.uk

INT
+49 4621 4210-0
service-int@sport-tiedje.de

www.sport-tiedje.com

DISCLAIMER

©2015 Darwin Fitness is a registered brand of the company Sport-Tiedje GmbH. All rights reserved. Any use of this trademark without the explicit written permission of Sport-Tiedje is prohibited.

Product and manual are subject to change. Technical data can be changed without advance notice.

Please find a detailed overview including address and opening hours for all specialist fitness stores of the Sport-Tiedje Group in Germany and abroad on the following website.

www.sport-tiedje.com/stores

DARWIN FITNESS GERMANY