cardiostrong

Assembly and operating instructions

Art. No. CST-TX40E

Treadmill TX40e

Dear Customer,

Thank you for deciding for a high-quality training equipment of the brand cardiostrong, the brand that makes athlete's hearts beat faster. cardiostrong offers a wide range of home fitness equipment like elliptical cross trainers, ergometers, treadmills and rowing machines. cardiostrong equipment is the optimal equipment for all those who want to train at home independent of goals and fitness level. For further information please visit www.sport-tiedje.com or www.cardiostrong.de.

SAFETY NOTICE

Please read all of the instructions carefully before assembly and first use. These instructions are intended to ensure speedy assembly and explain safe usage. Make sure that all people exercising with the equipment (in particular children and persons with limited physical, sensory, mental or motor capabilities) are informed about these instructions and its content in advance. In case of doubt, a responsible person must supervise the use of the equipment.

This equipment has been manufactured according to the latest safety knowledge. As far as possible, potential safety hazards which could cause injury have been eliminated. Make sure to follow the instructions carefully and that all parts are securely in place. If required, read through the instructions again to correct any mistakes.

Please pay close attention to the safety and maintenance instructions given here. The contract partner cannot be held liable for damage to health, accidents or damage to the equipment when it is not used in accordance with these instructions.

The equipment is only suitable for use at home. The equipment is not suitable for semi-professional (e. g., hospitals, clubs, hotels, schools, etc.) and commercial or professional use (e. g., health clubs).

Retain these instructions in a safe place for future reference, maintenance or when ordering replacement parts.

CONTENTS

1.1 Technical data

LED display of

+ speed in km/h
+ training time in min
+ training distance in km
+ calories burnt in kcal
+ heart rate (when using the hand sensors or a chest strap)
+ incline in %

Motor output: 2.5 HP continuous ouptut (DC - motor)
Speed range: 0.8 - 20 km/h
Speed hot keys: 7
Incline range: 0 - 15 %
Incline hot keys: 7

Total number of training programs:	22
Manual program:	1
Pre-set programs:	17
Heart rate controlled programs:	2
User defined programs:	2

Running surface size (L x W): 143 x 50 cm

Weight and dimensions:

Article weight (net, without packaging): 92.5 kg
Set-up dimensions (L x W x H): approximately 1850 mm x 840 mm x 1350 mm
Folded dimensions (L x W x H): approximately 1180 mm x 840 mm x 1500 mm

Maximum user weight: 286 lbs (130 kg)

1.2 Personal safety

+ Before you start using the equipment, you should consult your physician that this type of exercise is suitable for you from a health perspective. Particularly affected are persons who: have a hereditary disposition to high blood pressure or heart disease, are over the age of 45, smoke, have high cholesterol values, are overweight and/or have not exercised regularly in the past year.
+ Please note that working out excessively can seriously damage your health. Please also be aware that heart rate monitoring systems might be imprecise.
+ The equipment may only be used for its intended purpose; that means for running training by adults.
+ Any other usage is prohibited and potentially dangerous. The contract partner cannot be held liable for damage resulting from improper use.
+ The equipment is strictly for use by one person at a time.
+ Children should not be allowed unsupervised access to the equipment.
+ Before starting your training, make yourself familiar with all of the equipment's functions and setting options. Have an expert explain the correct usage of the product to you.
+ Make sure that nobody is in the range of motion of the equipment while exercising.
+ Keep your hands, feet and other body parts, hair, clothing, jewelry and other objects well clear of moving parts.
+ During use, wear suitable sports clothing rather than loose or baggy clothing. When selecting sports shoes, think about the suitability of the sole – preferably this should be made of rubber or other non-slip materials. Shoes with heels, leather soles, studs or spikes are not suitable. Never work out in bare feet.
+ It is also important to take note of the information given in the workout instructions for creating a workout plan.
+ At the first signs of weakness, nausea, dizziness, pain, difficulty in breathing or other abnormal symptoms, stop your workout immediately and, if necessary, consult your physician.
+ Without prior agreement from your authorized contract partner, opening the equipment is prohibited.
+ The equipment has stable steps on the sides that you can stand on in case of an emergency and leave the equipment.
+ The safety key should be inserted during all training.
+ The safety key and the power cable should be removed when you are not present in order to rule out improper usage by third parties.

Safety Key

+ The equipment has an EMERGENCY STOP mechanism for your safety. The equipment may only be operated when the safety key is properly attached to the contact point of the cockpit. The equipment will automatically stop immediately if the safety key is no longer on the contact point. That is why you should attach the safety key string with the clip to your clothing before training. Remove the safety key from the cockpit with the help of the string if you would like to quickly stop the treadmill, you can no longer handle the speed or an emergency occurs.
+ In order for the safety key to be released from the cockpit contact point in the event of a fall, the clip of the safety key must be attached (fixed) to your clothing!
+ An uncontrolled usage of the equipment by third parties can be avoided by removing and storing the safety key.
+ Prevent children from having access to the safety key.

1.3 Electrical safety

+ The equipment requires a 220 - 230V / 50 Hertz mains power supply.
+ The equipment should be connected directly to a grounded plug socket only by means of the power cable supplied. The use of multi-socket adapters or similar is not recommended. Extension leads must comply with local electrical safety guidelines. Always fully unwind the power cable.
+ The outlet should be secured with a fuse with a minimum value of „16 amperes, slow“.
+ In order to reduce the risk of an electric shock, always unplug the equipment from the mains socket immediately after your workout, before assembly or dismantling, and before maintenance or cleaning. Do not pull on the cable.
+ When plugged in, do not leave the equipment unattended at any time. To avoid use by anyone unfamiliar with the operation instructions, the power cable should be removed when the equipment is not in use.
+ Keep the power cable away from heat, oil and sharp edges. Do not route the power cable underneath the equipment or under a carpet or rug, and do not place any objects on top of it.
+ Make no modifications to either the power cable or the mains plug.
+ If the power cable or the plug are damaged or defective, contact your authorized contract partner. Do not use the equipment in the meantime.
+ Do not keep electrical devices (e. g., mobile phones) in close proximity to the console or the control electronics, otherwise display values (e. g., pulse measuring) could be inaccurate.

1.4 Set-up place

+ The equipment should only be used indoors, in a sufficiently heated and dry area (ambient temperature between 10°C and 35°C). The equipment should not be used outdoors or in rooms with high humidity (over 70%) like swimming pools. The equipment should only be stored in surroundings with an ambient temperature between 5°C and 45°C.
+ The training room should be well ventilated during training and not be exposed to any draughts.
+ Choose a location in which to place the equipment such that there is enough free space/clearance to the front, the rear and to the sides of the equipment (at least 1.50 m). Furthermore, the equipment should not be set up in main entrances or on escape routes.
+ Always keep the power cable away from hot surfaces and grounds and make sure that the cable is not stuck somewhere or becomes a „trip hazard".
+ No objects of any type should be inserted into the openings of the equipment.
+ The equipment should be placed on a level and solid surface, any unevenness in the floor should be leveled out.
+ A floor protective mat / equipment underlay can help to protect high-quality floor coverings (parquet, laminate, cork, carpets) from dents and sweat and can help to level out slight unevenness.

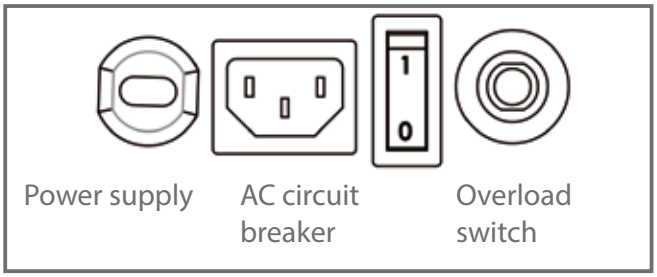

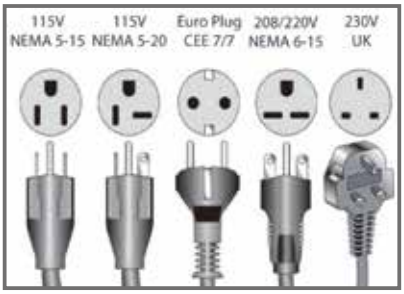

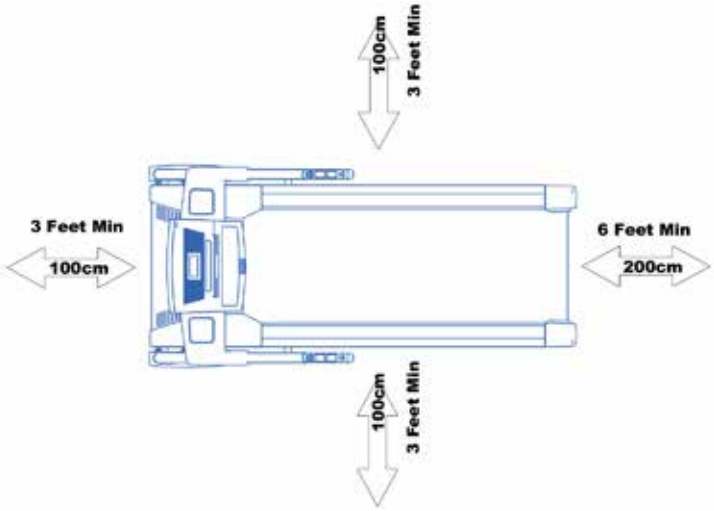

2.1 General instructions

+ Please check if all parts and tools belonging to the equipment are included in the delivery and if there is any transport damage. If there are any complaints, please contact your contract partner directly.
+ Some of the nuts and bolts to be used in assembly are already pre-mounted in order to make set-up as easy as possible.
+ The equipment must be assembled by adults. In case of doubt, ask for assistance from another person with technical skills.
+ Keep children away from the equipment during assembly, because small parts are included in the delivery and may be swallowed.
+ Make sure that you have enough space (at least 1.50 m) in every direction during assembly.
+ Do not leave any tools and packaging materials like plastic sheeting laying around to avoid danger of suffocation for children.
+ Assemble the equipment on an underlay mat or on the cardboard packaging in order to avoid damage to the equipment and to the floor (scratches).
+ Before starting assembly, all individual parts should be placed on the floor next to each other.
+ Read the assembly instructions carefully and assemble the equipment according to the illustrations. Proceed carefully and cautiously.
+ First loosen all parts and check for their correct fitting. Then tighten the screws using a tool.
+ Modifications to the design or improper repairs may pose a hazard to the user and should not be carried out. The product warranty may be void as a result.
+ Only authorized service technicians are permitted to carry out all servicing and/or repairs – it excludes maintenance and care.
+ Damaged or worn components may impair your safety and the lifespan of the equipment. You should therefore immediately replace damaged or worn components. Please contact your contract partner in such a case. The equipment should no longer be used until it has been repaired. When needed, only use original cardiostrong spare parts.
+ Check the tightness of all screw connections once a month.

+ In order to be able to guarantee the constructively defined safety level of this equipment, we recommend having the equipment regularly maintained (at least once a year) by specialists (contract partner service technicians).
+ The equipment may be cleaned of dust, dirt and sweat using a damp cloth. The use of solvents should be strictly avoided. Also, make sure that no liquids (e. g. sweat) get into the openings of the equipment (e. g. console).

2.2 Errors and error diagnosis

The equipment runs through regular quality controls during production. Nevertheless, errors or malfunctions on the equipment may occur. Individual parts are often the cause of faults and replacement is usually sufficient. Please use the following overview to see the six most common errors and how to repair them. If the equipment still does not work properly, please contact your contract partner.

Error	Cause	Repair
Console only shows lines	Safety key missing	Check if the safety key is inserted and place it in
Running belt tilted	Running belt not aligned	Align running belt in accordance with the instructions
Running belt slips through/stops	Belt tension/lubrication not ok	Check belt tension/lubrication in accordance with the instructions
Scraping noises	Running belt scrapes, because it is not aligned	Align running belt in accordance with the instructions
Display does not show anything	Check plug connections (cables)	Mains switch on "on", make sure that the safety key is inserted
No pulse display	Sources of interference in the room	Remove sources of interference (e. g. mobile phone, speakers, etc.)
	With chest strap Unsuitable chest strap	Use suitable chest strap (see recommended accessories)
	Position of the chest strap incorrect	Reposition chest strap and/or moisten electrodes
	Batteries empty	Change batteries

2.3 Error codes and troubleshooting

The treadmill was designed and produced in order to guarantee reliable and easy handling. If, however, there are any problems, these steps will help you find the cause. You can also try to turn it on and off. If the problem still cannot be solved, please contact your contract partner and ask for technical customer service.

Problem: The scan lighting is weak and no other lights are on.
Solution: The equipment is in power saving mode. Hold the START button for two seconds.

Problem: The console jumps or nothing turns on.
Solution: Check if the treadmill is correctly connected. Turn the power on and off. Make sure that the safety key is correctly inserted. Check all cable harness connections for correct connection. If the problem still exists, contact your contract partner.

Problem: The belt from the treadmill does not stay in the middle when the equipment is being used.
Solution: Check first if the treadmill stands on a levelled floor. Then have a look at the instructions for tensioning and aligning the belt.

Problem: The treadmill motor seems to be overloaded or E1 is displayed after a few minutes.
Solution: The silicone which was used for lubricating and which was given on the deck and the belt, is worn and the belt needs to be lubricated with silicone spray.

Problem: The band slips while using.
Solution: The belt may needs to be tensed after a certain time of use. Have a look at the instructions for belt tensioning and aligning.

Problem: The heart rate is irregular or is not detected at all.
Solution: Check whether your hands are wet (Aloe Vera helps). Check if all plugs at the back of the console are correctly connected and no cables are damaged. When you wear a chest strap, make sure that the batteries are loaded and electrodes are moistened and that the chest strap is worn correctly.

Problem: Silicone sign lights up on the display.
Solution: Lubricate the belt with 100% pure silicone. Then simultaneously hold the Speed DOWN button and the incline button until the light goes off.

Problem: E1 appears on the display after you have used the treadmill for a few minutes.
Solution: If E1 is displayed, remove the security key and plug it back into the treadmill to restart it. If E1 is still displayed, please check the following:
1. Check if all cable connections are correctly connected.
2. The treadmill does not move after you press START and E1 is displayed. Check if any part is stuck.
3. The treadmill runs for a few minutes after you press START, but then it stops. Check if the sensor (near the flywheel of the front wheel) is loose or broken.
4. Check if the cables connected to the motor are fixed and secure.
5. Please contact your contract partner and ask for technical customer service if E1 cannot be repaired.

Problem: E2 appears on the display after you have used the treadmill for a few minutes.
Solution:
1. Check if the console IC chip is attached correctly. In order to solve the problem, connect the console IC chip again.
2. Check if the console IC chip is bent or not connected correctly. In order to solve the problem, connect the console IC chip again.
3. Please contact your contract partner and ask for technical customer service.

Problem: E6/E7 appears on the display after you have used the treadmill for a few minutes.
Solution: If E6/E7 is displayed, remove the security key and plug it back into the treadmill to restart it.
1. Reset the incline value:
(1) If the position of the incline is under the medium level, press MODE and INCLINE UP. Hold both buttons to increase the incline. Release both buttons once the incline position has reached the medium level.

(2) If the position of the incline is above the medium level, press MODE and INCLINE DOWN. Hold both buttons to decrease the incline. Release both buttons once the incline position has reached the medium level. Try this for a few minutes. If the incline does not move, please contact your contract partner. Once the incline is at the medium level, turn off the power and restart the machine. Pay attention to see if E6/E7 is displayed still. If it is, please contact your contract partner and ask for technical customer service.
2. Check if the red and white incline cables are correctly connected to the MCB.
3. If the steps above do not help, please contact your contract partner and ask for technical customer service.

Problem: E9 appears on the display after you have used the treadmill for a few minutes.
Solution: 1. The upper and lower control cables are not correctly connected. In order to solve the problem, please check the cable routing (circuit).
2. Please contact your contract partner and ask for technical customer service.

Problem: The treadmill automatically stops during training.
Solution: The treadmill does not record your steps, because it stopped running or because the user weight is too low to detect the steps, in particular if an incline level is set. One option is to go to the personal settings and turn off the INTELLI-GUARD function (see 34).

! Warning: This releases the INTELLI-GUARD function, however, though it may be necessary based on different variables.

Technical mode

Personal setting	Information on the screen
Hold ENTER/MODE and then SPEED UP for three seconds to get to the technical mode. First the software version will appear. Then press ENTER/MODE to get to the personal settings or show the factory settings.	200 ENG MODE
Setting the measurements - metric (Si) or English (E). Press SPEED UP or DOWN to change between them. Press ENTER/MODE to confirm the setting and to get to the next setting.	En or Si
Turn the INTELLI-GUARD on/off. INTELLI-GUARD stops the equipment automatically if no steps are detected on the tread-mill. Press SPEED UP or DOWN to change it. Press ENTER/MODE to confirm the setting and to get to the next setting.	I-G On or Off
Setting the pause time. Here you can set the time for which the treadmill should stop before changing to the automatic settings. The options are 90, 180 or 300 seconds until the console resets. Press SPEED UP or DOWN to change it. Press ENTER/MODE to confirm the setting and get to the next setting.	PAUSE TIME 90 or 180 or 300
Turning the acoustic alarm on/off !WARNING: The acoustic alarm was set by the manufacturer in order to warn users when the treadmill starts or the speed changes. The user may turn off the alarm at one's own risk.	BZ On or OFF
Set up treadmill. Start speed after the PAUSE button was pressed. 0 indicates that the treadmill will start at the lowest speed. 1 indicates that the treadmill will start at the speed it had before the PAUSE button was pressed. Press SPEED UP or DOWN to change it. Press ENTER/MODE to confirm the setting and to get to the next setting.	BZ On or OFF

“Made for iPhone” or “Made for iPad” means that an electronic accessory was specifically designed to connect with an iPhone or iPad. It was certified by developers in order to fulfill Apple Performance Standards. Apple is not responsible for the operation of the instrument or its compliance with safety standards. Please remember that using such an accessory with an iPhone or iPad may influence wireless performance. iPad and iPhone are brands from Apple Inc., registered in the USA and other countries.

2.4 Care and maintenance

Belt tension

The belt must be tensioned if it slips during usage. Your treadmill is equipped with tension bolts that can be reached from the back of the treadmill. Before you tension the belt, start the treadmill and set the speed to 4.8 km/h (3 mph). With the help of a 6 mm Allen key, which is included in the hardware bag, turn the right and left tension bolts a half rotation clockwise.

Once you have set both sides with a half rotation, test the treadmill to see if it slips any more. If it still slips, repeat the step and test it again.

If you turn one side more than the other, the belt will drift off the side and must be centered /aligned again. Do NOT tighten MORE THAN two full rotations on each side. If it still slips, please contact your contract partner.

NOTE: An over-tensioning of the belt may cause unnecessary friction and wear on the belt, motor and electronic system.

Aligning the running mat

Make sure that the running mat is always centered on your treadmill. The running style and uneven floors are two things that may cause a drifting of the running mat. Small adjustments to the bolts (on the back of the treadmill) are required if the belt moves away from the center.

1. Press "START" and increase the speed of the treadmill to 4.8 km/h (3 mph).
2. Stand behind the treadmill in order to determine which direction it moves away from.
3. If the belt drifts off to the left, turn the left adjusting bolt 1/4 clockwise and the right adjusting bolt 1/4 counterclockwise (see figure 1).
4. If the belt drifts off to the right, turn the left adjusting bolt 1/4 counterclockwise and the right adjusting bolt 1/4 clockwise (see figure 2).
5. Watch the belt run for about two minutes. Repeat steps 3 to 5 if necessary.

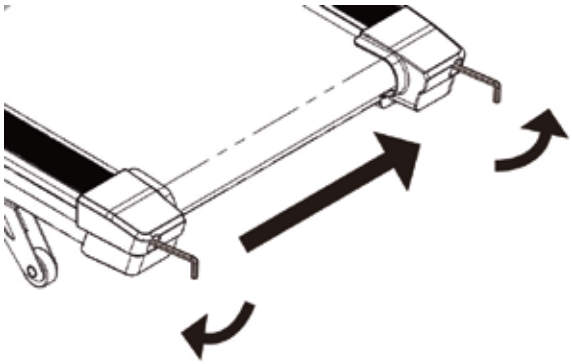 Move the belt to the right	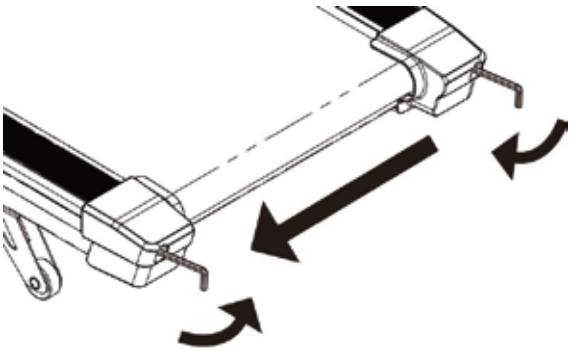 Move the belt to the left

Belt lubrication

Use only 100% silicone and avoid silicone sprays that contain additives and oil distillates. An ounce of silicone should be used per application.

The running belt should be lubricated every three months (independent of usage) or every 50 operating hours depending on what occurs first. Even if the treadmill is not used, the silicone will evaporate after some time and the belt dries out.

Note: Even though the running belt was already lubricated by the manufacturer, the running mat should be lubricated before first use - just in case the belt dried out within the production time and the purchase date.

Lubricate the silicone on the underside of the running belt. Do NOT apply it to the running surface. To do this, put the treadmill upright and apply the silicone to the inner side of the belt. Spray the silicone downwards and across the belt. Turn the belt around half-way and repeat the step. About an ounce of silicone should be used for application.

Note: When you do the belt lubrication, make sure that the treadmill is on a surface that can be cleaned easily. After you have lubricated the belt, remove excess silicone from belt and frame.

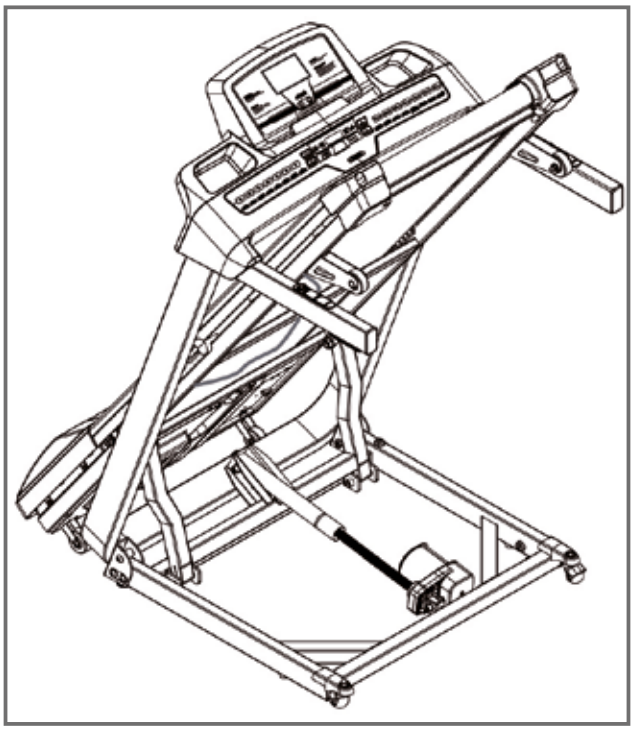

2.5 Maintenance and service calendar

The cockpit, casing, handrails and entire frame must be cleaned after every training session with a moist towel (no solvent!) in order to avoid damage caused by sweat. After 150 hours of operation, the maintenance symbol reminds you to clean the treadmill. After you have cleaned the treadmill and checked all components, turn off the symbol by simultaneously pressing the INCLINE up and INCLINE down buttons.

The following routine work must be done in the specified time intervals:

Part	Weekly	Monthly	2x annually	Annually
Display console	C	I		
Belt tension			I	
Belt lubrication			I	
Plastic covers	C	I		
Screws & cable connections		I		
Legends: C = cleaning; I = inspect				

3.1 Package contents

The package contains the parts represented in the illustration, including a power cable with mains plug. If one of the illustrated parts is missing, please contact your contract partner.

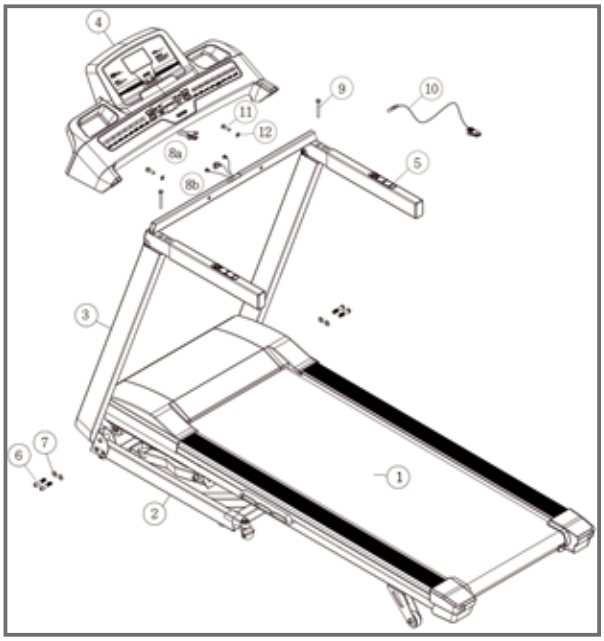

No.	Assembly parts
1	Main frame
2	Frame tube
3	Console mast
4	Console construction
5	Handle set
6	Hexagon Allen screw (M10*55L)
7	Washer (M10)
8a	Console and pulse cable - upper part
8b	Console and pulse cable - lower part
9	Flathead screw (M8*70L)
10	Safety key
11	Hexagon Allen screw (M8*35L)
12	Washer (M8)

Tools in the hardware bag


2x flathead screw (M8*70L)

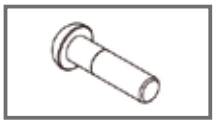
2x hexagon Allen screw (M8*35L)


2x washer (M8)


2x Allen key (M6)

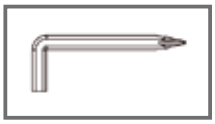
2x Allen key (M5)

Preassembled


4x hexagon Allen screw (M10*55L)


4x washer (M10)

3.2 Assembly instructions

Step 1:

1. Open the box and place it flat on the floor.
2. Remove the operating instructions, the hardware bag and the power cable. Read the instructions BEFORE assembly.

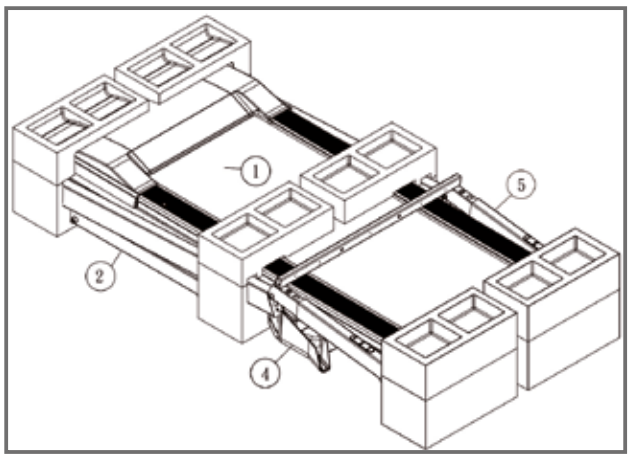

Step 2:

1. Lift the rear part of the treadmill.
2. Remove the console construction (4) under the equipment by lifting the main frame.

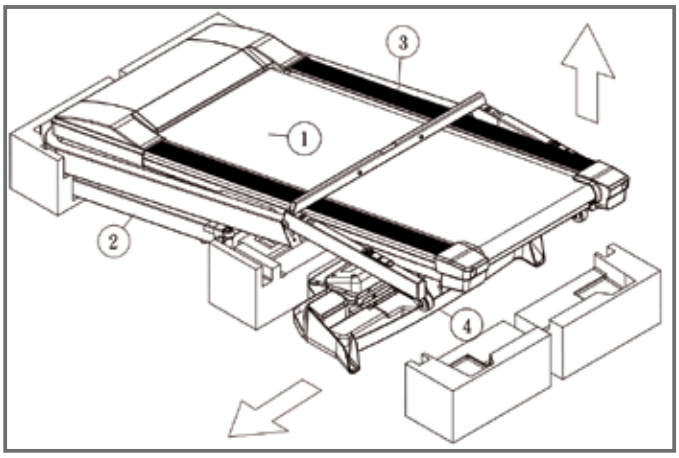

Step 3:

1. Remove the plastic foil and the Styrofoam. Carefully place the main frame on the floor.
2. Screw off 2 hexagon Allen screws (6) and 2 washers (7) from the frame tube (2).
3. Repeat the step on the other side and keep the 4 screws and 4 washers.

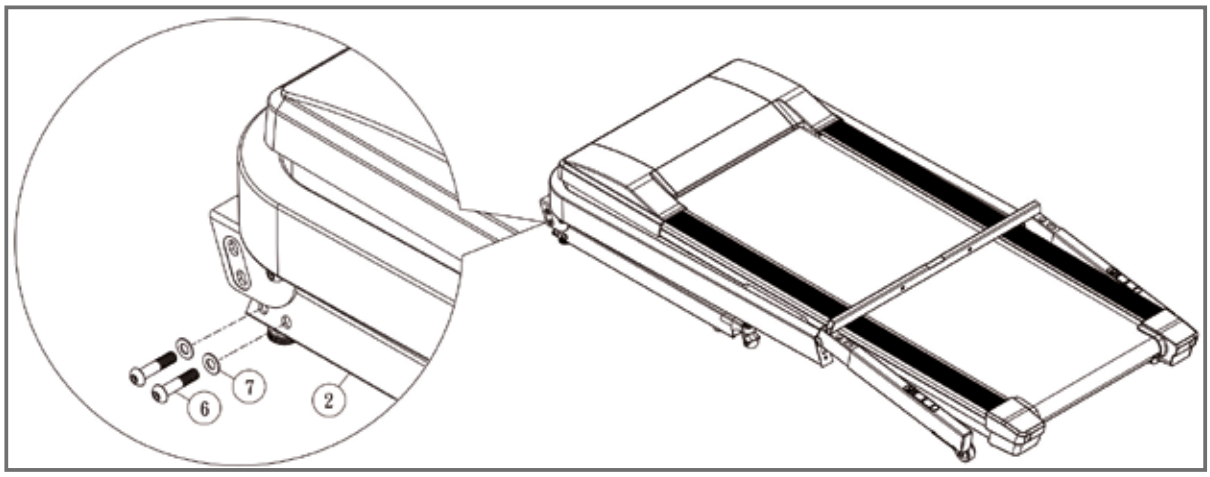

Step 4:

1. Lift the console mast (3) and the handle set (5).
2. Align the drill holes from the console mast to those of the frame tube (2).

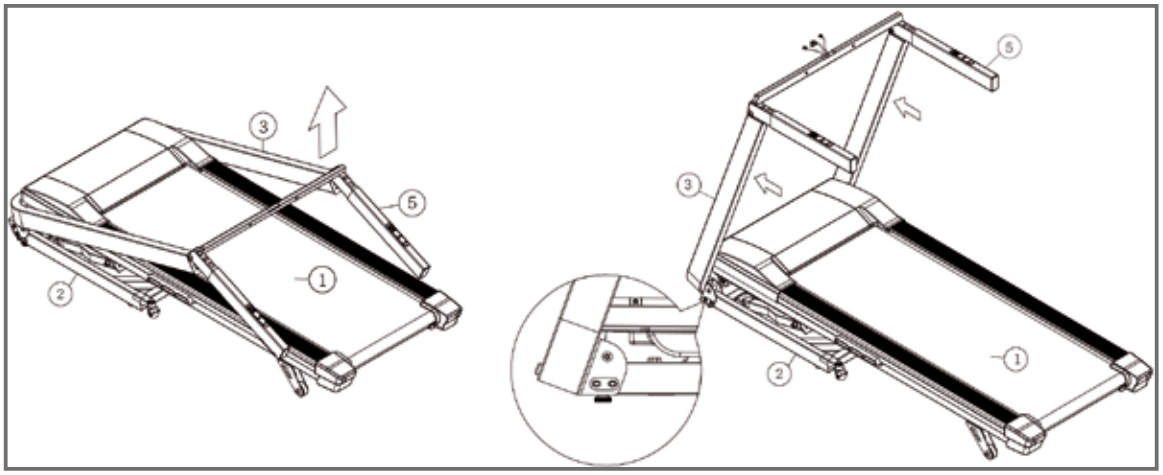

Step 5:

1. Tighten the 2 hexagon Allen screws (6) and washers (7) in the masts (3) by means of an Allen key M6.

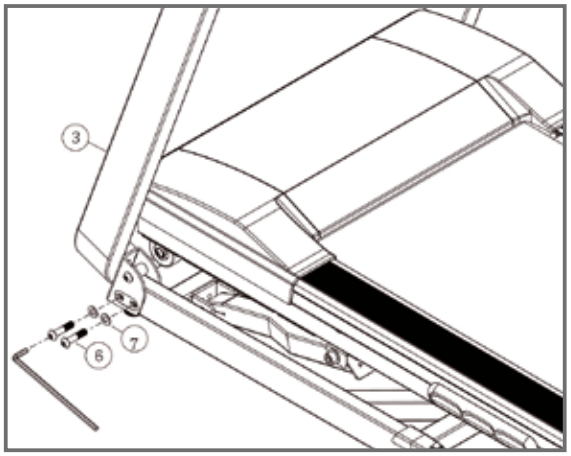

Step 6:

1. Take the 2 flathead screws (9) and the Allen key M5 from the hardware bag.
2. Mount the screws (9) on the handle set (5).

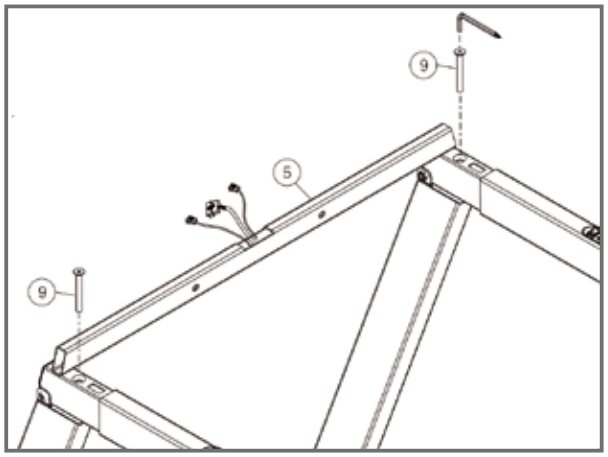

Step 7:

1. Connect the console and the pulse cable (8a, 8b).
2. Place the console construction (4) on the handle set (5).

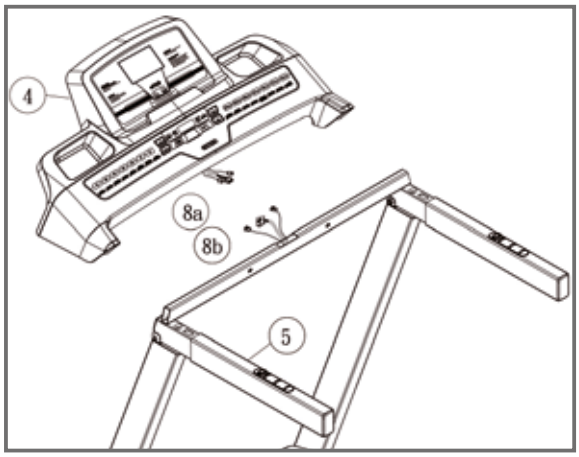

Step 8:

1. Plug the cables (8a, 8b) in the back of the console construction (4).

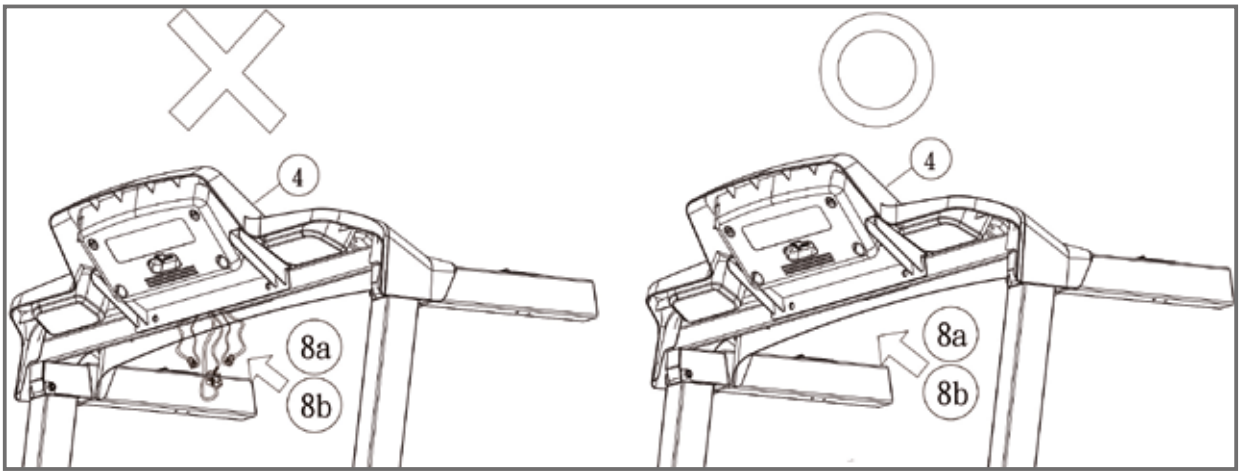

Step 9:

1. Tighten the 2 hexagon Allen screws (11) and washers (12) with the Allen key M5.

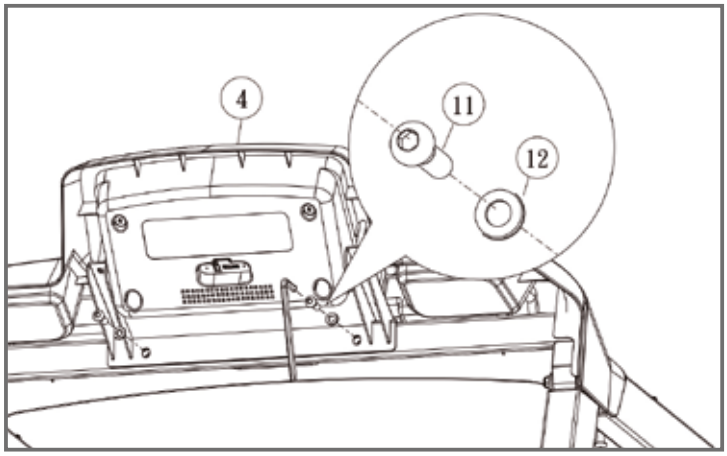

Step 10:

1. Place the safety key (10) on the console construction (4).

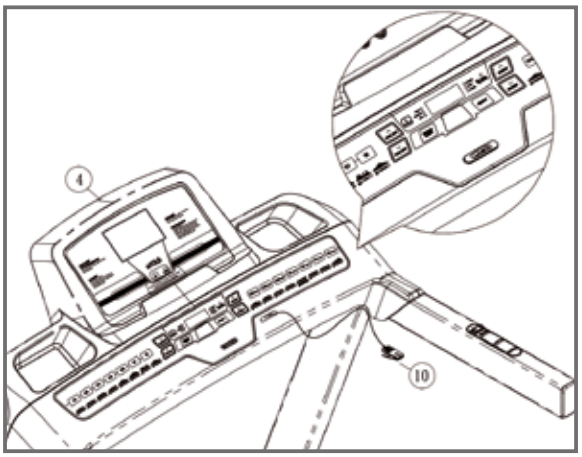

Step 11:

1. Set the height adjustment located under the equipment so that it automatically remains aligned and stable on the floor.

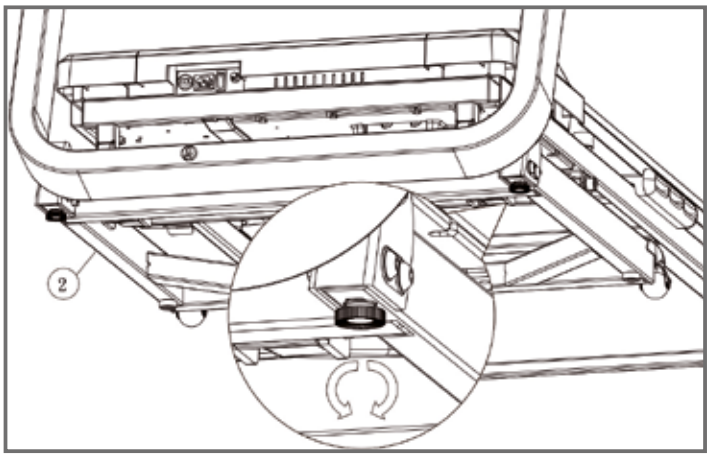

Folding and unfolding the treadmill.

1. Do not stand on the treadmill when eFOLD is being done. Stand on the side of the treadmill to operate it.

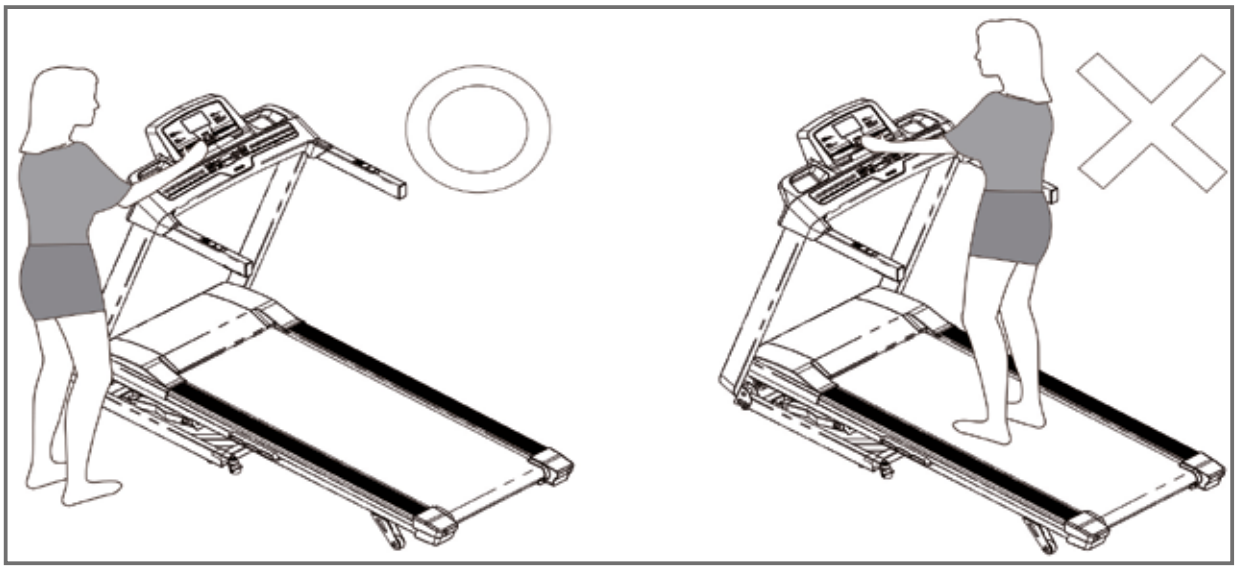

1. Press eFOLD UP for two to three seconds to start the folding process. You can hear a beep every two to three seconds meanwhile. It will stop once folding is done.
2. Press eFOLD DOWN for two to three seconds to start the unfolding process. You can hear a beep every two to three seconds meanwhile. It will stop once unfolding is done.

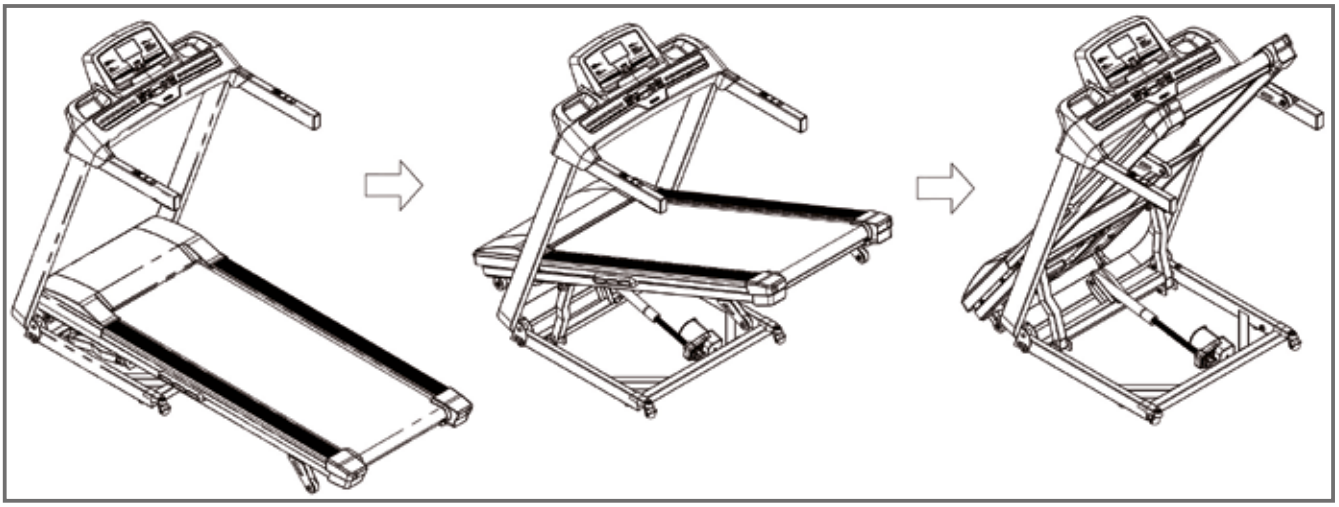

NOTE:
- eFOLD only works in standby mode, without motor operation.
- You will hear a beeping sound every two to three seconds meanwhile and this will first stop when the treadmill is in the corresponding position.
- If there is a power failure during this, it must be restarted and done in standby mode.
- If an emergency occurs, please press STOP or remove the safety key in order to immediately stop the eFOLD function.

1. Make sure there is enough space to set up the treadmill when it is unfolded.
2. Keep an open space of 100 cm from furniture or a wall in front of the treadmill.

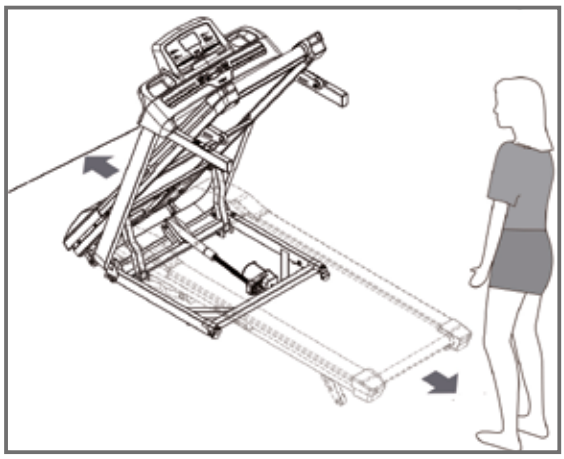

1. While eFOLD UP or DOWN is done, no people or animals may be below or on the treadmill deck.
2. Do not step on the incline motor or the incline bar.

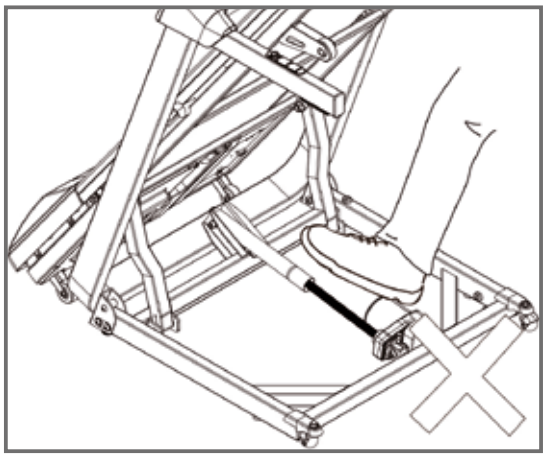

As your treadmill is very heavy, we recommend assembling it with at least two people.

Transport and storage

The treadmill is equipped with a folding mechanism that reduces the space needed. This allows you to transport the treadmill easier when it is not being used.
1. Make sure that the on/off switch is turned off and the power cable has been removed from the outlet and the treadmill.
2. Make sure that nothing is on top of or behind the treadmill that may be spilled, run over and stop the treadmill from being completed folded together.
3. There are four transport wheels. Place both hands on the handles and press or move the treadmill to transport it.

NOTE:
- Do not lean against the treadmill once it is folded and do not place any objects on it that would make it unstable or make it fall down. This can lead to serious personal injury.
- Do not connect the power cable if the treadmill is folded up and do not try to use the treadmill when it is folded up.

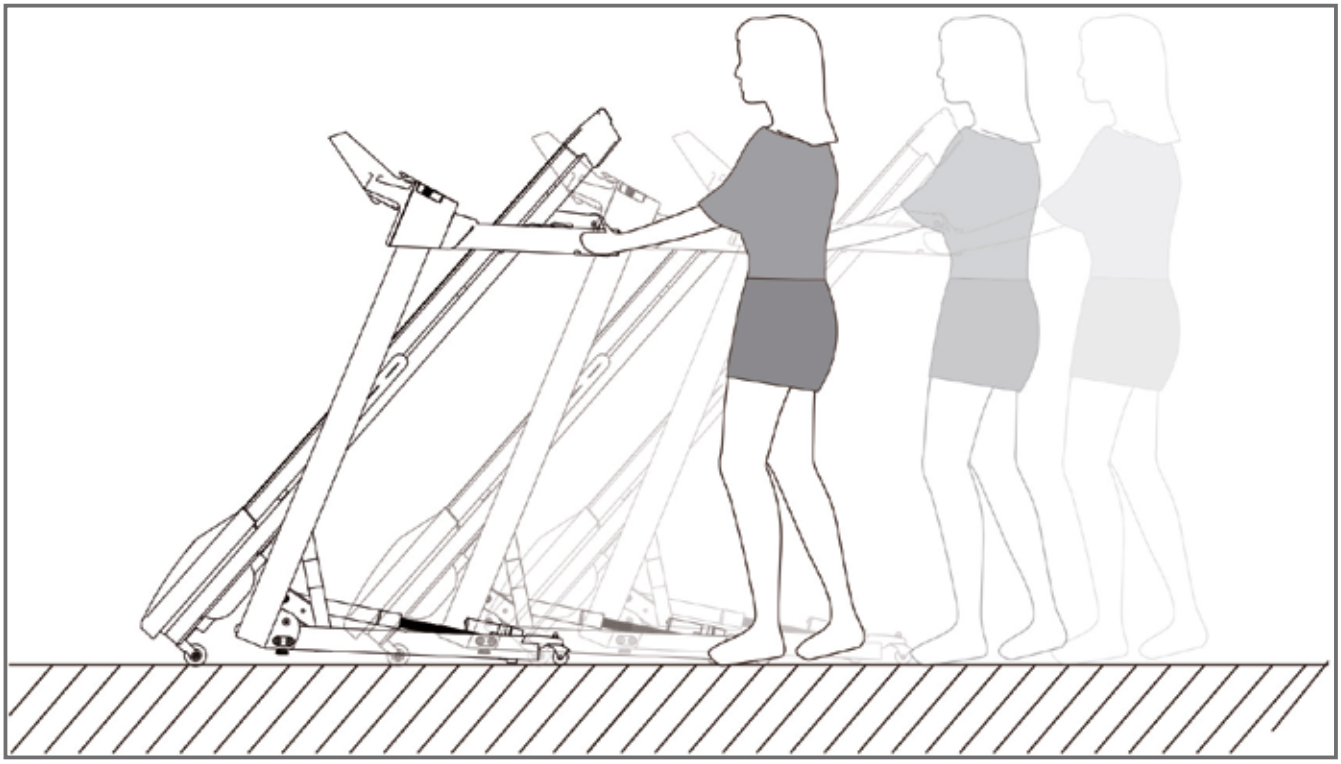

Place both hand on the hands and press or move the treadmill in order to transport it.

4.1 Console display

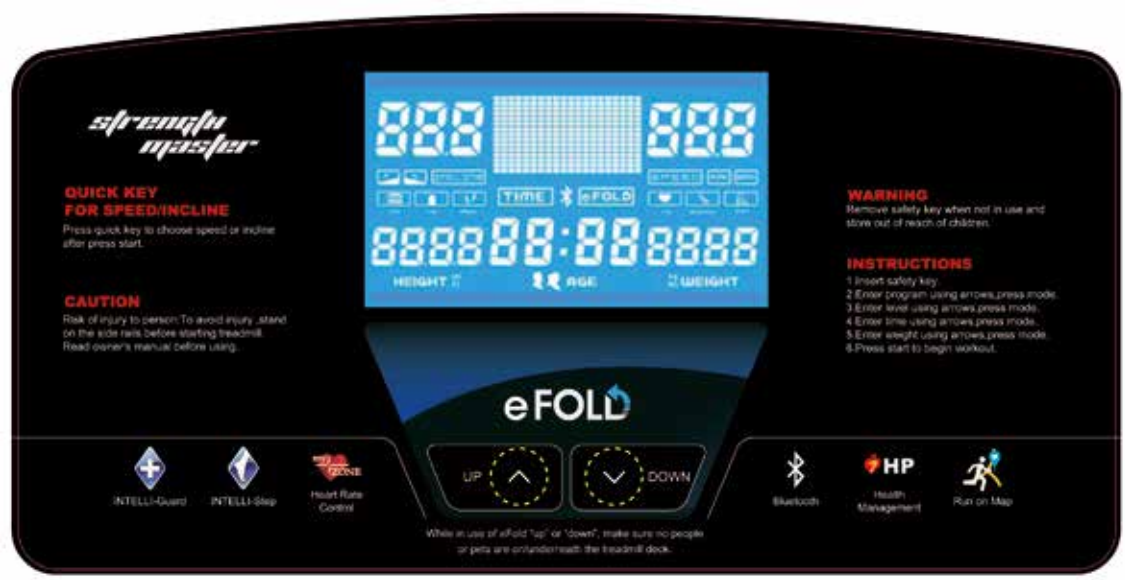

Energy saving indicator

1. If none of the buttons from the equipment are pressed within 10 minutes while in standby mode, the console will go into energy saving mode. The scan lighting will appear.
2. In order to leave the energy saving mode, press START for a second until the lighting is turned on. If you release the button, the lighting will go off and the console goes into standby mode.

Training feedback: The display window shows the following information:

Time	Time
Incline	Incline level
Speed	Training speed (km/h; specification may be changed into mph in the technical mode)
Calories	Approximate calories burnt since the beginning of training

Distance	Total covered distance in miles or kilometers since the beginning of training
Pulse	Your heart rate measured with the hand sensors (on the handles)
Scan	This mode scrolls through time, distance, calories, heart rate and indicates all information every five seconds.

Innovative characteristics

ENERGY SAVING MODE
The energy saving mode turns off the power of the treadmill - except for a weakly illuminated scan lighting. The power consumption here is also stopped below 0.1 watts.

BLUETOOTH
The treadmill has an integrated Bluetooth module in order to support the Strength Master apps. These can be downloaded in the Apple Store or on Google Play (optional).

eFOLD FUNCTION
eFold is a simple and electronic folding system. It helps you fold and unfold the treadmill.

INTELLI-GUARD™
This treadmill is equipped with the Intelli-Guard safety function. This function detects when you stop running on the treadmill and stops the treadmill automatically due to safety reasons in order to avoid falls and the resulting injuries. The Intelli-Guard function is triggered when the treadmill detects that you are no longer walking or running on it.

NOTE:
The Intelli-Guard function is automatically removed when the speed on the treadmill is below 1.0 mph (1.6 km/h). If you are in this speed level, the step sign will be illuminated. When the sign is illuminated, the treadmill will not stop automatically. If the speed is more than 1.0 mph (1.6km/h), Intelli-Guard is first activated after 25 counted steps.

NOTE:
After 20 seconds, the console emits a beeping sound every five seconds and the treadmill will then stop automatically. These sounds serve as a reminder that the running mat will soon stop. If you are still on the treadmill, please put your feet on the side rails and prepare for the running mat to stop. The Intelli-Guard function neither replaces the usage of your safety key nor appropriate measures to stop the treadmill when it is not being used.

INTELLI-STEP™
The treadmill has the INTELLI-STEP counting function. This function records all resistance on the running mat when you step on it. There are different factors that influence the accuracy of this function, for example, running style, weight and habits of the user.

Example: The data of a light user and specifically a light user running with an incline is more difficult to record for INTELLI-STEP. The higher the incline, the more difficult it is for this function to record the steps. It also applies to slow speeds. In summary, it can be stated that INTELLI-STEP represents a great function for users who place value on a step count program (walking or running). However, it depends on many variables in regards to accuracy. The accuracy of the count depends on individual characteristics as well as variables in regards to the treadmill usage.

4.2 Button functions

Start/Stop button	- Press the START button to start manual training without having to enter any individual data. When the program starts, your training time will count up from 00:00 and you can manually set the incline or the speed during your training. - If you would like to stop your training, press the START/STOP button to PAUSE. In order to restart training, press the START/STOP button again. The console resets if there is no activity within 90 seconds. The auto-reset can be raised to 300 seconds by going into the technical mode (P. 34 in these instructions). - If there is no lighting in the display and the scan light is only weakly illuminated, press the START/STOP button for two seconds to turn on the display.
RESET	In order to reset the console, press the RESET button. All training data will be deleted.
ENTER/MODE buttons	The ENTER button serves for the selection of all information that is used during the program setting (program, training level, training time, user weight). The specification of the user weight serves for a more precise calculation of how many calories were burnt. The MODE button serves to change between the displays for training feedback.
INCLINE/ SPEED UP/ DOWN buttons	The UP and DOWN buttons for speed and incline serve to change the value of any selection during the program setting and the setting of the speed and incline during training. If you use a preset program, you can set the profile from the program with the help of these buttons in order to make the program easier or harder. For example, you can increase the incline level for the entire program in the incline program by pressing the INCLINE UP button.
BLUETOOTH button	You can turn Bluetooth on or off with the Bluetooth button (optional).
eFOLD button	-- eFOLD UP - You will hear a beeping sound every two to three seconds meanwhile and it will first stop when the treadmill is in the corresponding position. - eFOLD DOWN - You will hear a beeping sound every two to three seconds meanwhile and it will first stop when the treadmill is in the corresponding position.

NOTE:
The sensor only works once eFOLD DOWN is complete. eFOLD DOWN will stop immediately as soon as the sensor detects any objects below the deck. If the objects cannot be removed, you will hear a beeping sound every second and the treadmill will not work. If you would like to continue eFOLD DOWN, remove the disrupting objects and press the eFOLD DOWN button again.

4.3 Programs

4.3.1 Manual program

The fastest way - Press the START button to start training. This will bring you into the manual program and TIME (time) starts counting from 00:00. You can also press ENTER in order to select the manual program. By pressing ENTER, you can set a specific training TIME and also specify your WEIGHT for precise calorie calculation.

4.3.2 Pre-set programs

1. **Select program** - Press the UP/DOWN buttons in order to select your desired training program. Each time you press the buttons it will take you to the next program. Once you have found your desired program, press ENTER.
2. **Select program mode** - For every program selection, you can choose if you would like to run the program in incline or speed mode. Press UP to select the speed mode or DOWN for the incline mode. Press ENTER.
3. **Set program level** - There are three intensity levels for every pre-set program (1 is the easiest, 3 is the hardest). Select with the UP/DOWN buttons and press ENTER.
4. **Set time** - Set the TIME (training time) program with the UP/DOWN buttons. Press ENTER.
5. **Set weight** - Enter your weight on the console with UP/DOWN for more precise calorie calculation. Press ENTER.
6. Press **START** to start the training.

4.3.3 User-defined programs

User programs must be set in advance. In order to set a user program:
1. **Select USER1 or USER2 program** - Select U-1 or U-2 with UP/DOWN. Press ENTER.
2. **Set level** - Select the level for each training session. Press ENTER and repeat this until all 20 units are complete.
3. **Set time** - Set the training time with UP/DOWN. Press ENTER.
4. **Enter weight** - Enter your weight on the console with UP/DOWN for more precise calorie calculation. Press ENTER.
5. **START** - Press the START button.

Once the program has been set, scroll to U-1 or U-2 and press START.

4.3.4 Pulse programs

The constant pulse control program requires you to enter your heart rate that should be maintained during training. The interval requires the entry of the LOWEST and HIGHEST heart rate. While you are using the pulse programs, you have to hold the pulse handles or wear a chest strap during training.

HR constant:
1. **Select HRC1** - Select the H1 program with UP/DOWN. Press ENTER.
2. **Select program mode** - Press SPEED UP in order to select the speed mode and INCLINE UP for the incline mode. Press ENTER.
3. **Set time** - Set the training time with UP/DOWN. Press ENTER. Remember that the program includes a three-minute warm up.
4. **Enter age** - Enter your age with UP/DOWN. Press ENTER.
5. **Set target heart rate** - Set your target heart rate with UP/DOWN. Press ENTER.
6. **Enter weight** - Enter your weight with UP/DOWN. Press ENTER.
7. Press **START** to start the training.

HR interval:
1. **Select HRC2** - Select the H2 program with UP/DOWN. Press ENTER.
2. **Select program mode** - Press SPEED UP in order to select the speed mode and INCLINE UP for the incline mode. Press ENTER.
3. **Set time** - Set the training time with UP/DOWN. Press ENTER. Remember that the program includes a three-minute warm up.
4. **Enter age** - Enter your age with UP/DOWN. Press ENTER.
5. **Enter HIGH target heart rate** - Enter your high target heart rate with UP/DOWN. Press ENTER.
6. **Enter LOW target heart rate** - Enter your low target heart rate with UP/DOWN. Press ENTER.
7. **Enter weight** - Enter your weight with UP/DOWN. Press ENTER.
8. Press **START** to start the training.

Operation:
During training, you can set the speed and incline level with the UP/DOWN buttons. In order to stop your training program, press the START button and press the RESET button to reset your program.

4.3.5 Program overview

The advanced console of the treadmill contains programs that can each be divided into one of the four zones: sport training, healthy lifestyle, weight control and heart rate control. You can complete any of the programs either in the speed or incline control program.

After you have selected the program and the speed control, the speed will change during training, whereby it follows the respective program profile. If you select the incline control for the program, the incline changes depending on the respective incline profile of the program during training. It applies for all programs except for user-defined programs. It allows for the advance selection between the speed and incline program.

Sport training

P-01: Long, slow distance
Long, slow distance: (40-minute default)

Long, slow distance is great training for everyone! Beginners can easily begin their training program. The training should be done at least once a week in order to maximize the complete development of cardiovascular endurance. Training sessions with long, slow distance are also wonderful for advanced users who do this training on days that follow a harder, more intense training session.

P-02: Short interval
Short interval: (20-minute default)

Short intervals are ideal for beginners who would like to profit from the benefits of interval training, but are not yet prepared for harder and longer intense interval training. Short intervals are also ideal for advanced users in order to develop their speed and anaerobic condition. Short interval exercises are particularly fun after days with exercises with a longer duration and slow speed. Remember that it is important to vary your training intensity and duration in order to maximize your fitness development. Make sure to integrate a few interval training sessions in your training program - at least one to two times a week.

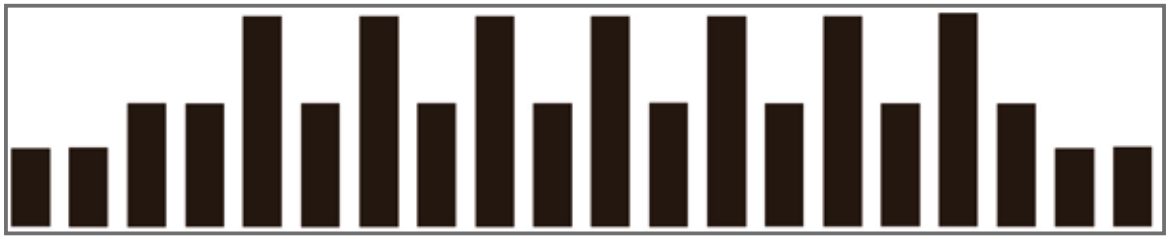

P-03: Moderate interval
Moderate interval: (30-minute default)

As soon as you complete regular training and you can determine an improvement in your general fitness, you are ready for training in the "moderate intensity interval". Start with a low intensity and increase your training intensity to the level that represents a challenge, but is not too difficult. Remember that for this training, you change between a recovery interval followed by a high intensity interval. You should feel comfortable challenging yourself while training, because the next recovery interval is waiting for you. This training improves your overall aerobic endurance and maximizes your anaerobic fitness.

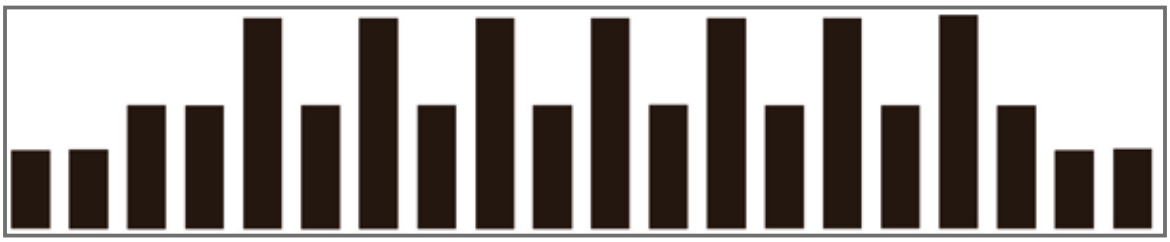

P-04: Long interval
Long interval: (40-minute default)

Long interval exercises are ideal to maximize the calories burnt and to improve your anaerobic fitness - you can train harder on a level with higher intensity. Similar to moderate intervals, you must remember that a recovery interval follows every intensive interval. Thus, you can comfortably prepare for exercises with an increasingly higher level.

P-05: Negative interval -1
Negative interval -1: (30-minute default)

The negative interval -1 provides you with the benefits of a training with an even speed. Simultaneously, it motivates you to slowly reach an increasingly higher training intensity. This allows for a slow decline in the training intensity. You can improve your overall health and fitness and motivate yourself in a comfortable manner to a higher overall intensity of your training.

P-06: Negative interval -2
Negative interval -2: (30-minute default)

The negative interval -2 was designed in order to offer you training that begins with a slight increase in the training intensity, continues the training with a set intensity and finally ends with a progressive decrease in intensity. Training that is based on an increase at the beginning and a decrease at the end of the training develops your overall aerobic cardiovascular endurance. Training that includes a lowering of intensity is also ideal to maximize the calories burnt - however, it is most suitable for a longer duration, for example, 40 or 50 minutes.

P-07: Fartlek
Fartlek: (30-minute default)

The varying training intensity with a constantly changing interval exercise, beginning with a slow speed and increasing to a moderate to high speed, will enrich to your training. Your training sessions can be completed faster than you can imagine, whereby your body and your mind will be provided with excellent fitness benefits. Brain research proves that a constantly varying intensity while training has many benefits for your entire brain fitness. The body experiences wonderful growth in anaerobic cardiovascular fitness thanks to the increase of training intensity with constantly varying intervals with a subsequent lowering of intensity.

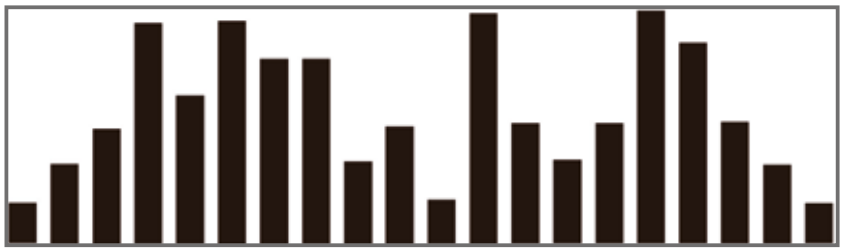

Healthy lifestyle

P-08: Uphill
Uphill: (30-minute default)

Increase your training intensity gradually and with a lot of fun with the uphill training. The goal of this training is to stimulate your body to improve your overall cardiovascular fitness and to maximize the muscle cell growth in the stressed muscles. This uphill training was designed in order to start with a slow intensity, to increase it constantly to a peak intensity and then to lower this again gradually. During the peak intensity, you maximize your calories burnt whereby your body can train longer and still profit from the higher intensity when you slowly decrease the intensity again and return to the initial level.

P-09: Pyramid climb
Pyramid climb: (30-minute default)

Gradual increases in intensity during training are ideal for stimulating your body to improve overall cardiovascular fitness, whereby the muscle cell growth in the stressed muscles is maximized. The pyramid climb was designed in order to begin with a very slow speed and gradually increase intensity to the peak and finally to gradually return to the initial level. During the peak intensity, you maximize your calories burnt whereby your body can train longer and still profit from the higher intensity if you slowly decrease the intensity again and return to the initial level.

P-10: Climb plateau
Climb plateau: (30-minute default)

The climb plateau training delivers you all of the advantages of consistent training, but motivates you to maintain a higher, consistent intensity level. You can improve your overall health and fitness and simultaneously slowly and comfortably bring yourself to a higher overall training intensity. Remember that if you simply use your treadmill with the same speed and same training duration every day, your body will only improve to the level that you have created. In order to improve your overall health and fitness, you always have to change your exercises so that you do not do the same workout the entire week. Slowly increase your overall training intensity and simultaneously your entire training duration.

P-11: Ladder
Ladder: (30-minute default)

The biggest advantages of this exercise are the direct advantages for the heart and cardiovascular system. The heart-health-ladder was designed in order to supply your cardiovascular system with a series of progressively harder training intensities, which improve your overall aerobic endurance and simultaneously stimulate your anaerobic endurance. Remember that if you do this training, it may be challenging for a few minutes. However, each increase was carefully planned so that recovery intervals are also included after the highest intensity intervals. Thus, you will feel good during training and you can motivate yourself to improve your cardiovascular fitness.

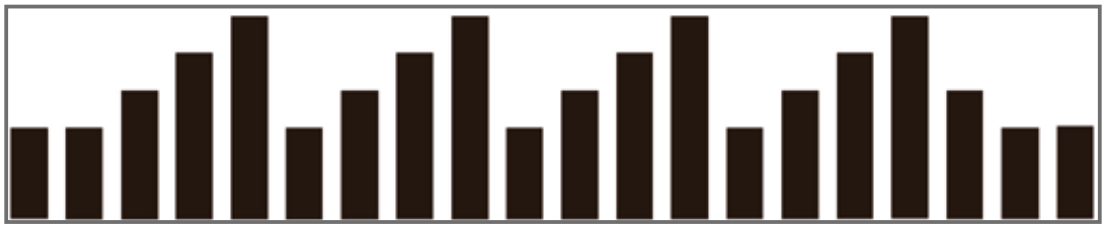

P-12: Uphill interval
Uphill interval: (20-minute default)

Uphill intervals are unique, because they supply the body with the benefits of interval training as well as the additional benefit of a gradual increase of the overall intensity of the maximum interval during training. Start this training at a level that is comfortable for you and constantly increase intensity during each maximum interval, whereby you can motivate yourself every time to a somewhat higher intensity and be aware of the following recovery intervals. With the help of this training, you can maximize the calories burnt during each session with higher intensity and improve your overall anaerobic fitness.

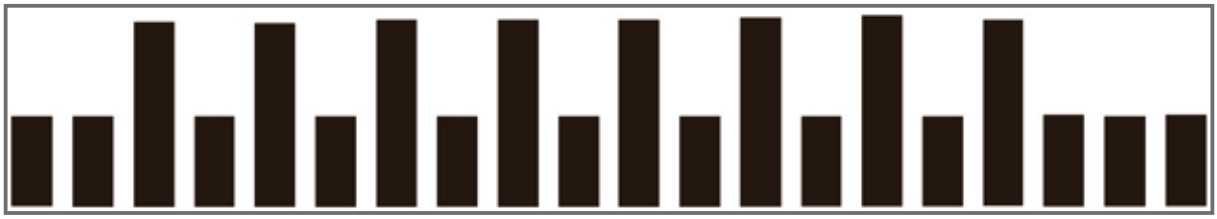

Weight control

P-13 Constant speed
Constant speed: (40-minute default)

Improve your fitness and stimulate your body to burn more fat. Exercises with a constant speed are great to help you improve your overall basic endurance. Most exercises of this type have the objective of maintaining a set load level throughout the entire exercise. You start the "constant speed" training with a very slow speed and increase this during training to a moderate speed. Your goal is to train in a low, moderate to high, moderate intensity.

P-14: Long, slow distance
Long, slow distance: (40-minute default)

Long, slow distance is great training for everyone! Beginners can easily start the training program, whereby they should train at least once a week in order to maximize the growth of heart rate endurance. It is equally excellent for experienced users who do this training on days following a harder, more intense training day.

P-15: Cardio run
Cardio run: (20-minute default)

Cardio run is a training with a constant speed, however, with a higher intensity than with the “long, slow distance” training. Cardio run is more of a medium or raised training session designed to motivate you to achieve a challenging, constant speed and to maintain this speed throughout the entire training time. Cardio run is a great training program if you want to prepare for a special event.

P-16: Short interval
Short interval: (20-minute default)

Research studies show that short interval exercises are ideal for those who want to increase their weight reduction and improve their overall cardiovascular fitness. Varying intensities during training - from a moderate, slow stage to high intensity, in a defined time - and the repetition of these units maximize your overall calories burnt during training. Another advantage is that the user is not forced to maintain a high intensity level throughout the entire training. The short recovery intervals allow your body to do more successful training with high intensity throughout the entire training.

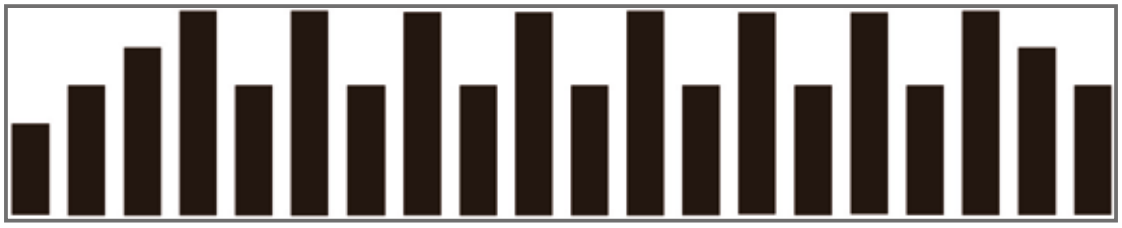

P-17: Uphill running
Uphill running: (30-minute default)

The uphill running program gradually increases the intensity of the training peaks with a high intensity. The goal is to motivate the body to improve the overall cardiovascular fitness, whereby the muscle cell growth of the stressed muscles is maximized as well. With this training, you start with a slow, comfortable speed and gradually increase it to the peak intensity, followed by a quick decrease in intensity to a recovery interval. The total calories consumption is maximized during peak intensity, whereby your body can train for a longer period of time.

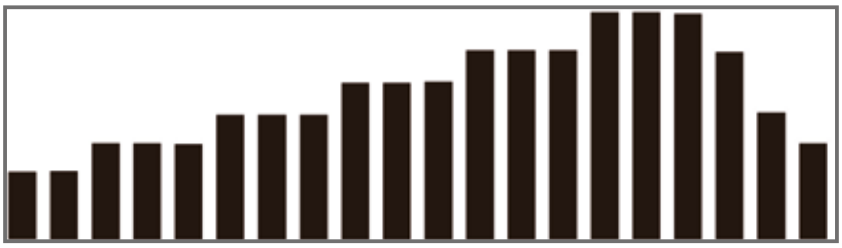

5.1 Heart rate measuring

Pulse measurement through hand sensors
The hand sensors integrated in the handles allow you to determine your heart rate. You can measure your heart rate by lightly grasping the sensors with both hands at the same time. Blood pressure changes occur due to the heartbeat. The sensors measure the changes to the electric skin resistance caused by it. These values are then used to create an average and are displayed on the screen of the console as a heart rate.

Note:
For some people, the skin resistance change caused by the heart rate is so minimal that the measurements do not allow for usable values. Strong callus or sweat on the hands may also impair a correct measurement. In such cases, the heart rate will not be shown at all or only incorrectly.

If the measurement is incorrect or not taken at all, please check if it happens to only one person or to several people. If the pulse display only does not work in a single case, the equipment is not defective. In this case, we recommend using a chest strap to achieve a permanently correct heart rate display.

CAUTION: Your training equipment is not a medical device. Different factors may influence the accuracy of the heart rate display. The heart rate display only serves as a training aid.

Telemetric heart rate measuring
Your treadmill is already equipped with a heart rate receiver as standard. Using a chest strap makes it possible for you to have a wireless heart rate measuring. This optimal and ECG-precise type of measuring reads the heart rate directly from the skin through a transmitting chest strap. The chest strap then sends the impulse to the receiver integrated in the console.

Positioning the chest strap and moistening the electrodes:
Place the belt directly below the chest, while the transmitter should be placed on the middle of the chest. The chest strap should sit comfortably, but not too loose. If the belt is too loose, the contact to the electrodes may be disrupted or the belt may slip while exercising. The transmitter turns on automatically once it is put on. In order to

allow for a precise measuring, you should moisten the rubber electrodes. This is best done with a special chest strap contact gel, which is also used for ultrasound scans.

Note:
If you have not been active in doing sports for a longer period of time, you should first go to your physician in order to discuss your training with them. You should also contact your physician in advance in the event of heart problems, high/low blood pressure and obesity.

Training with heart rate orientation
Heart rate orientation guarantees an extremely effective and healthy training. Through your age and the following table, you can quickly and easily read and determine the optimal pulse for your training. An acoustic alarm will sound if your heart rate exceeds the set target heart rate. Which target heart rate is important for which training goal can be found out in the following.

Fat burning (weight management): The main goal here is to burn deposits of fat. In order to achieve this training goal, a low training intensity (approximately 55% of the maximum heart rate) and a longer training period are required.

Cardiovascular training (cardio training): The primary goal is to increase endurance and fitness through an improved provision of oxygen through the cardiovascular system. In order to achieve this training goal, medium intensity (approximately 75% of the maximum heart rate) with a medium training period is required.

Anaerobic (maximum) load training: The main goal of maximum load training is to improve recovery after short, intense loads in order to be able to quickly return to the aerobic zone. In order to achieve this training goal, a high intensity (approximately 90% of the maximum heart rate) with short, intense load is required, which is followed by a recovery phase in order to prevent muscle fatigue.

Example:
For a 45-year-old man or woman, the maximum heart rate is 175 (220 - 45 = 175).

- The fat burning target zone (55%) is at approximately 96 beats/min. = (220 - age) x 0.55.
- The cardio target zone (75%) is at approximately 131 beats/min. = (220 - age) x 0.75.
- The maximum heart rate for an anaerobic load training (90%) is at approximately 157 beats/min. = (220 - age) x 0.9.

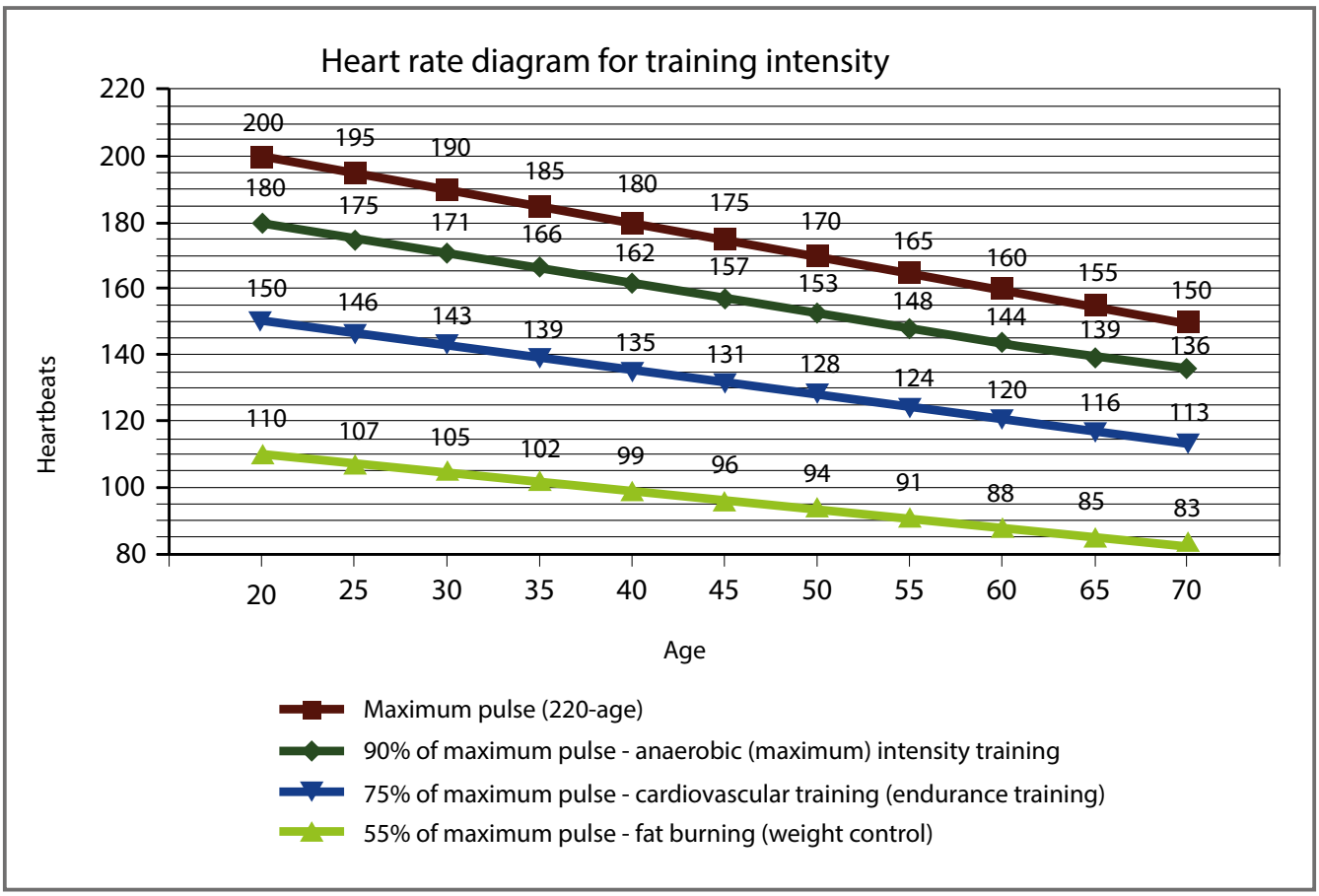

5.2 10 tips for effective running training

1. Set goals
What would you like to achieve with your training? Weight regulation, improved endurance, prevent risk of disease, more mobility, cardiovascular training, etc. In order to achieve your long-term training goal, set individual partial goals, e. g., weekly or monthly goals.

2. Concentration on training
Try to only dedicate yourself to your training unit and do not be distracted.

3. Correct movement
When you do the movement, you should start at a moderate speed and hold on the handles if needed. The speed can then be increased gradually. The adjustment of your natural running style will occur relatively quickly. Beginners and overweight people should start with a walking program in order to not overload their joints in the beginning.

4. Correct breathing / appropriate resistance level
Do not overexert yourself physically and mentally by starting with resistance levels that are too high. Start slowly and increase the resistance steadily. Aim for regular and calm breathing.

5. Keep yourself properly hydrated
Drink, drink, drink! Have a drinking bottle close by during your workout.

6. Sufficient recovery periods
Allow your body and your muscles enough time to recover after your workout. Only a relaxed muscle will be fully operational again.

7. Choose a diversified program
Different program functions of your training console support you in doing this. For example, you can complete an interval, incline or step counting training session.

8. Creating the right workout
Every training session should have a warm-up phase, a cool-down phase and a targeted stretching. It increases physical and mental performance and prevents injuries and sore muscles.

9. Workout journal
Keep a record of your training sessions. Note the date, resting pulse, active pulse, recovery pulse, resistance level, time, distance, calories burnt and fitness level.

10. Reward yourself
Do something good for you and your body after training or after achieving a partial goal. Go to the sauna or a swimming pool. Mix a protein shake or enjoy a delicious salad.

5.3 Designing a workout

We recommend two to three training sessions a week. There should be a five-minute warm-up phase before every training. The training ends with a cool-down and targeted stretching.

Warm-Up	approx. five min.	Dynamic movement of larger muscle groups at low intensity. The body core temperature rises and the metabolism process starts quicker.

WEEK 1 + 2				
	Beginner		Advanced	
Days	**Duration**	**Intensity**	**Duration**	**Intensity**
Mon	20 min.	Brisk walking	30 min.	Running at a slow speed
Wed	20 min.	Brisk walking	30 min.	Running at a slow speed
Fri	20 min.	Brisk walking	30 min.	Running at a slow speed
Increased speed for two to three minutes in between in the second week. Maintain your heart rate.			Increase the speed in between in the second week. Maintain your heart rate.	

WEEK 3 + 4				
	Beginner		Advanced	
Days	**Duration**	**Intensity**	**Duration**	**Intensity**
Mon	25 min.	After every 10 min. run for 1 min.	35 min.	Running at a moderate speed
Wed	25 min.	After every 10 min. run for 1 min.	35 min.	Running at a moderate speed

Fri	25 min.	After every 10 min. run for 1 min.	35 min.	Running at a moderate speed
In the fourth week, run for two minutes after every 10 minutes. Maintain your heart rate.			In the fourth week, increase the speed for one minute each. Maintain your heart rate.	

WEEK 5 + 6				
	Beginner		Advanced	
Days	**Duration**	**Intensity**	**Duration**	**Intensity**
Mon	30 min.	Alternate walking and running	40 min.	Running according to heart rate
Wed	30 min.	Alternate walking and running	40 min.	Running according to heart rate
Fri	30 min.	Alternate walking and running	40 min.	Running according to heart rate
In the fifth week, run for three minutes after every eight minutes. In the sixth week, run for three minutes after every six minutes. Maintain your heart rate.			Pay attention to your heart rate.	

WEEK 7 + 8				
	Beginner		Advanced	
Days	**Duration**	**Intensity**	**Duration**	**Intensity**
Mon	35 min.	Walk 8 minutes, run 5 minutes	45 min.	Running according to heart rate
Wed	35 min.	Walk 8 minutes, run 5 minutes	45 min.	Running according to heart rate
Fri	35 min.	Walk 8 minutes, run 5 minutes	45 min.	Running according to heart rate
Increase in the eight week: Walk five minutes, run seven minutes. Maintain your heart rate.			If you feel comfortable, then include a few steps or hills in your training.	

Cool-down approximately five minutes Finish your training at low resistance and at slow speed. Allow your body to gently slow back down.

5.4 Stretching exercises for leg & chest muscles

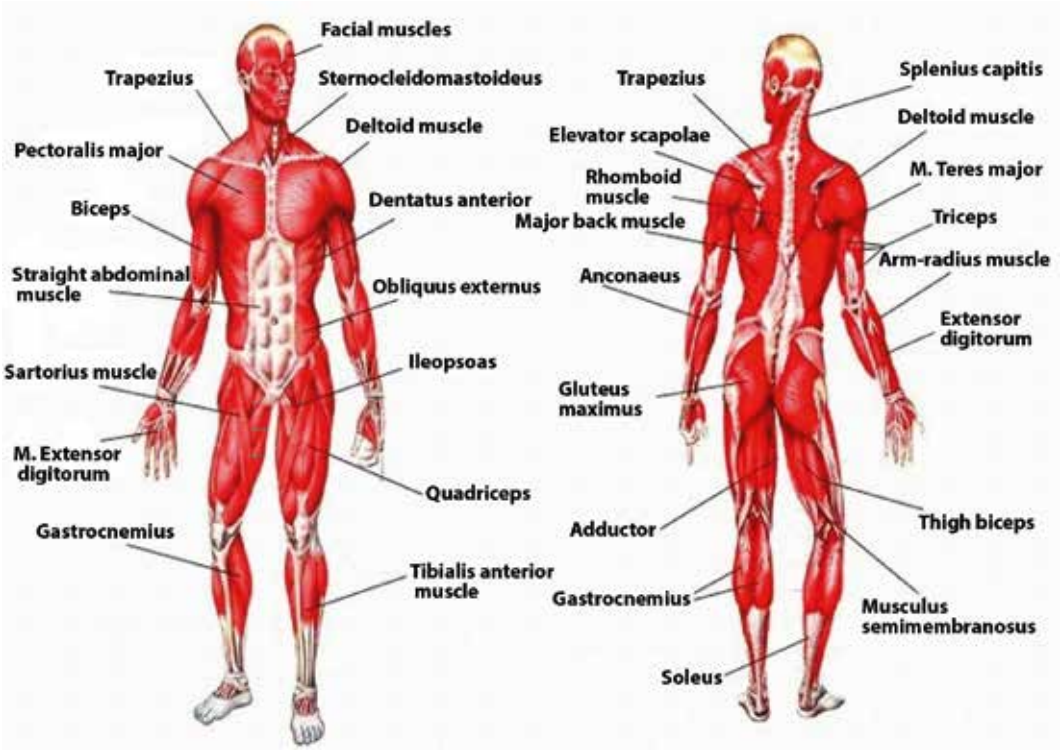

1. Exercise: Stretching of front thigh / leg extension (quadriceps)

- Stable position, grab arches of feet
- Pull heel towards buttocks, knee points downwards (no abduction)
- Straight upper body, avoid tilting the pelvic forward (hollow back) by tensing the abdominal muscles
- Change legs

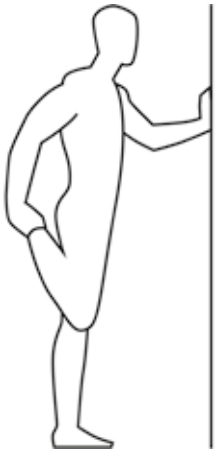

2. Exercise: Stretching the back thigh / leg curl (hamstring)

- Pull thigh towards upper body with both hands
- Stretch through increased stretching in the knee joint
- The lower leg maintains contact with the floor, keep hips bent
- Change legs

3. Exercise: Stretching the calf muscles (gastrocnemius)

- Place feet parallel to each other pointing forward, the heels touch the floor
- Support yourself on a chair coming from a lunge
- Move your body weight to the front leg, press your heel from the rear leg towards the floor and hold the contact
- Slowly stretch your knee of the rear leg until you feel the stretch in your calves
- Change legs

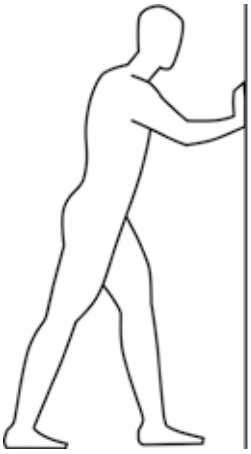

4. Exercise: Stretching the chest muscles (pectoralis major)

- Stand parallel to a wall
- Place your forearm at 90° to the wall with the elbow just above shoulder height
- Turn your head and upper body gradually to the opposite sides until you feel a stretch in the front chest, of the shoulder being leaned on
- Pay attention to tension in your abdominal and gluteal muscles
- Your weight is on your front leg
- Change legs

All recommendations of these instructions apply solely to healthy persons and are not suitable for those with heart or cardiovascular problems. All of the tips are intended only as a guide to help you create a workout. Your physician can offer appropriate advice for particular, personal requirements.

We hope you enjoy your workout and have a lot of success!

5.5 Workout journal

(Copy template)

Date | Distance | Time (min.) | Resistance level | Training weight | Ø Pulse | Calories burnt | I feel ... | Body weight

cardiostrong's fitness equipment is subject to strict quality controls. However, if a fitness equipment purchased from us does not work perfectly, we take it very seriously and ask you to contact our customer service as indicated. We are happy to help you by phone via our service hotline.

Error descriptions
Your fitness equipment is developed for long-term, high-quality training. However, should a problem arise, please first read the operating instructions. For further assistance, please contact your contract partner or call our service hotline. To ensure your problem is solved as quickly as possible, please describe the defect as exactly as possible.

In addition to the statutory warranty, we provide a warranty for every fitness equipment purchased from us according to the following provisions.

Your statutory rights are not affected.

Warrantee
The warrantee is the first/original buyer and/or any person who received a newly purchased product as a gift from the original buyer.

Warranty periods
The following warranty periods begin on delivery of the fitness equipment.

Model	Usage	Full warranty	Frame	Motor
TX40e	Home use	24 months	30 years	10 years

Repair costs
According to our choice, there will either be a repair, a replacement of individual damaged parts or a complete replacement. Spare parts, that have to be mounted while assembling the equipment, have to be replaced by the warrantee personally and are not a part of repair. After the expiration of the warranty period for repair costs, a pure parts warranty applies, which does not include the repair, installation and delivery costs.

The terms of use are defined as follows:

- Home use: solely for private use in private households up to 3 hours per day
- Semi-professional use: up to 6 hours per day (e. g. rehabilitation centers, hotels, clubs, company gyms)
- Professional use: more than 6 hours per day (e. g. commercial gyms)

Warranty service

Within the warranty period, equipment which develops faults as a result of material or manufacturing defects, will be repaired or replaced at our discretion. Ownership of equipment or parts of equipment which have been replaced is transferred to us. The warranty period is not extended nor does a new warranty period begin following repair or replacement under the warranty.

Warranty conditions

For the warranty to be valid, the following steps must be taken:
Please contact our customer service by email or phone. If the product under warranty has to be sent in for repair, the seller bears costs. After expiry of the warranty, the buyer bears the costs of transport and insurance. If the fault is covered by our warranty, you will receive a new or repaired equipment in return.

Warranty claims are invalid in case of damage resulting from:

- misuse or improper handling
- environmental influences (moisture, heat, electrical surge, dust, etc.)
- failure to follow the current safety measures for the equipment
- failure to follow the operating instructions
- use of force (e. g. hitting, kicking, falling)
- interventions which were not carried out by one of our authorized service centers
- unauthorized repair attempts

Proof of purchase and serial number

Please make sure that you are able to provide the appropriate receipt when claiming on your warranty. So that we can clearly identify the model of your equipment, and for the purposes of our quality control, you will need to give the serial number of your equipment, when contacting the service team. Where possible please have your serial number and your customer number ready when you call our service hotline. It will help us to deal with your request swiftly.

If you cannot find the serial number on your fitness equipment, our service team is at your disposal to offer further information.

Service outside of the warranty period
We are also happy to issue an individual cost estimate if there is a problem with your fitness equipment after the warranty has expired, or in cases which do not fall under the terms of the warranty, e. g. normal wear and tear. Please contact our customer service team to find a quick and cost-effective solution to your problem. In such a case you will be responsible for the delivery costs.

Communication
Many problems can be solved just by speaking to us as your specialist supplier. We know how important it is to you as a user of the fitness equipment to have problems solved quickly and simply, so you can enjoy working out with minimal interruption. For that reason, we also want to resolve your queries quickly and in a straightforward manner. Thus, please always keep your customer number and the serial number of the faulty equipment handy.

7 DISPOSAL

At the end of its operational life, this equipment cannot be disposed of in normal household waste. Instead, it must be disposed of via an electricals recycling centre. Further information can be obtained from your local authority's recycling service.

The materials can be recycled as per their symbols. Through the reuse, recycling of materials or other forms of recovery of old equipment, you make an important contribution to the protection of the environment.

	Sport-Tiedje floor mat size XXL Art. No. ST-FM-XXL	
	Polar transmitter chest strap T34 non-coded Art. No. T34	
	Togu Senso Walking Trainer Art. No. TOGU-470501	
 	Chest strap contact gel 250ml Art. No. BK-250	Sport-Tiedje silicone spray Art. No. ST-1003
	Fitness equipment care set Art. No. HF-500	

9.1 Service hotline

So that we can give you the best possible service, please have your **model name, part number, serial number, exploded drawing and parts list** ready.

SERVICE-HOTLINE

DE

+49 4621 4210 0

+49 4621 4210 699

service@sport-tiedje.de

Mon - Fri	8:00 am - 6:00 pm
Sat	9:00 am - 6:00 pm

NL

+31 172 619961

info@fitshop.nl

Mon - Thu	9 am - 5 pm
Fri	9 am - 9 pm
Sat	10 am - 5 pm

UK

+44 141 876 3972

orders@powerhousefitness.co.uk

Mon - Fri	9 am - 5 pm

9.2 Serial number and model name

Before assembling your equipment, find the serial number on the white sticker and enter it in the appropriate space.

Serial number:

Brand / category:	Model name:
cardiostrong treadmill	TX40e

9.3 Parts list

No.	Qty.	Part number	Description
(01)	1	81TC41500101A07	Main frame set
(02)	1	81TC41500201A07	Frame Base Set
(04)	1	80TC41500401A07	Incline base set
1	1	81TC41500401A07	Incline Base
2	2	511212008000114	Round head hexagonal socket screw
3	4	541112026200114	Washer
4	2	511212007000114	Round head hexagonal socket screw
5	4	531212001200114	Nylon Nut
(05)	1	80TC41500501A42	Support post set
1	1	81TC41500501A42	Support post
2	4	511410005000114	Oval head hexagonal socket screw
3	4	541110020150114	Washer
4	2	511212005500114	Hexagonal socket screw
5	2	531212001200114	Nylon Nut
6	2	541113026200114	Washer
(06)	1	80TC41500602A07	
(07)	1	80TC41500701A07	Console bracket set
1	1	81TC41500701A07	console bracket
2	2	511408003500114	Socket Screw
3	2	541108016150114	Washer
(09)	1	80TC41500901000	Running deck set
1	1	206218068012651	Running deck
2	8	531408000800111	T-nut
3	8	511608003000114	Screw
4	6	511408002500114	Screw
5	16	541108014150114	Washer
6	1	201TC4150181A07	Reinforcing bar
7	2	511408003000214	Screw bolt
8	1	591210350650011	Adhensive tape
(10)	1	80TC41501002000	Incline motor set
1	1	401240132309910	Incline motor

No.	Qty.	Part number	Description
3	1	511610004000114	Hexagonal cap screw
4	1	511210005700115	Hexagonal socket screw
5	2	531210001000114	Nylon Nut
6	2	541110020150114	Washer
(12)	1	80TC41501201004	Main frame attachment set
1	6	342008003002001	Rubber Cushion
2	2	342008003001802	Rubber Cushion
3	4	331808205602301	Wheel
4	4	511408004000114	Screw
5	4	541108016150114	Washer
6	4	531208000800114	Nut
7	8	521204112700114	Screw
8	1	312TC4150011004	Motor Cover-Lower
9	2	313TC4150011012	Cushion
10	2	541108030200114	Washer
11	2	322212004002004	End cap
12	3	362710002501000	Separate cover
13	1	83T370101004	Infrared sensor set
14	4	591110300050011	One sided adhesive
15	2	5000000041	
(13)	1	80TC41501301004	Frame Base Attachment Set
1	2	341306402601001	Space Pad
2	2	521205501900114	Screw
3	2	351706403001101	DESK BASE FOOT, ASJUSTABLE
4	2	331200004005801	Pulley
5	2	544110018200114	Washer
6	2	532009501700114	Hexagonal nut
7	2	592400000000001	Power Cord Buckle
8	1	592400000000013	Fixer
9	1	521204112700114	Screw
(14)	1	80TC41501401000	Handlebar Attachment Set
1	2	511408004700114	Hexagonal Socket Screw
2	2	531208000800114	Nut

No.	Qty.	Part number	Description
3	2	541108016150114	Washer
4	2	511908007000124	Socket Screw
(15)	1	80TC41501502000	Motor Set
1	1	401121104903510	Motor-220V
2	1	205213828628501	Core
3	1	204TC1125191A07	Motor Bracket
4	4	511208001500214	Hexagonal socket screw
5	2	511208001200115	Round Head Hexagonal Socket Screw
6	6	544182016200114	Spring washer
7	2	511608004500214	Hexagonal cap screw
8	8	541108016150114	Washer
9	4	531108000800114	Hexagonal nut
10	1	592400000000006	Bracket
11	1	531203000400111	Nylon Nut
12	1	511303000800114	Round head cross screw
13	1	541103007100111	Flat Washer
(16)	1	80TA11101601000	Sensor Set
1	1	592400000000009	Speed sensor bracket
2	1	405503470210001	SENSOR
3	1	521204101000114	Socket
(17)	1	83T172150108	
1	1	204TC4150151A07	Control board fixer
2	1	403121500100050	MCB-220V
3	1	407302250160001	Switch-AC Power
4	1	407101250100001	Overload switch
5	1	407202250150001	POWER SOCKET
6	2	405301010300801	Black Cable
7	1	405301010301501	Black Cable
8	1	405301010301502	Wire(White)
9	1	405301010302102	White Cable
10	1	405301010301503	Cable-yellow/grenn
11	4	512506401300111	Truss head cross screw
12	2	511505001500111	Flat Head Corss Screw

No.	Qty.	Part number	Description
13	1	511505002500111	Screw
14	6	541105010100211	Flat Washer
15	1	543105010060111	Washer
16	3	531205000500111	Nylon Nut
17	2	531105000400111	Nut
18	4	531204000500111	Nylon Nut
20	4	511504001000111	Screw
21	8	541105010100111	Washer
22	1	406222005231502	Choke
23	1	406125005300001	Filter
25	1	592400000000001	Power Cord Buckle
26	1	591410350070012	Twin Adhesive
(18)	1	80TC41501802021	
1	1	83T180105021	Consoel set
2	17	521204101000114	Socket
(19)	1	80TC41501901000	Overlay Set
1	1	61TC41500210002	Overlay
2	1	61TC41500311001	Button Overlay
(20)	1	83T200101007	Safety key
1	1	204TB2100190B01	Conducting Foil
(21)	1	83T210014002	Cable Set
1	1	405106171330001	Cable
2	1	205234620812701	Core
3	2	592100000000010	tie
4	2	592400000000001	Power Cord Buckle
5	2	592200000000002	Wire clipper
6	1	531204000500111	Nylon Nut
7	1	511504001500111	Truss head cross screw
8	2	541105010100111	Washer
9	1	592400000000013	Fixer
(22)	1	83T220600003	Roller Set
1	1	207117060006002	Front Roller Set
2	1	207217050006001	Rear Roller Set

No.	Qty.	Part number	Description
3	3	512207906400115	Hexagonal socket screw
4	3	541108016150114	Washer
(23)	1	206116495289121	Running Belt
(24)	2	213024011265104	Side rail
(25)	1	80TC41502501004	Motor cover set
1	1	311TC4150071004	Motor cover-left
2	1	311TC4150081004	Motor cover-right
3	1	311TC4150091004	Motor cover-middle
4	8	521204101000114	Socket
5	4	512506401300114	Screw
(26)	1	80TC41502601004	Rear End Cap Set
1	1	311TC4150051004	Rear End Cap-Left
2	1	311TC4150061004	Rear End Cap-Right
3	4	521204101000114	Socket
(30)	1	80TC41503001000	Packing set
(32)	1	405405130318501	AC Power Cord
(33)	1	80TB41503301000	Receiver set
(34)	1	83T340001001	Silicon Set
(35)	1	209107010483001	DRIVE BELT
(38)	1	80TC4150381	BT set

9.4 Exploded drawing

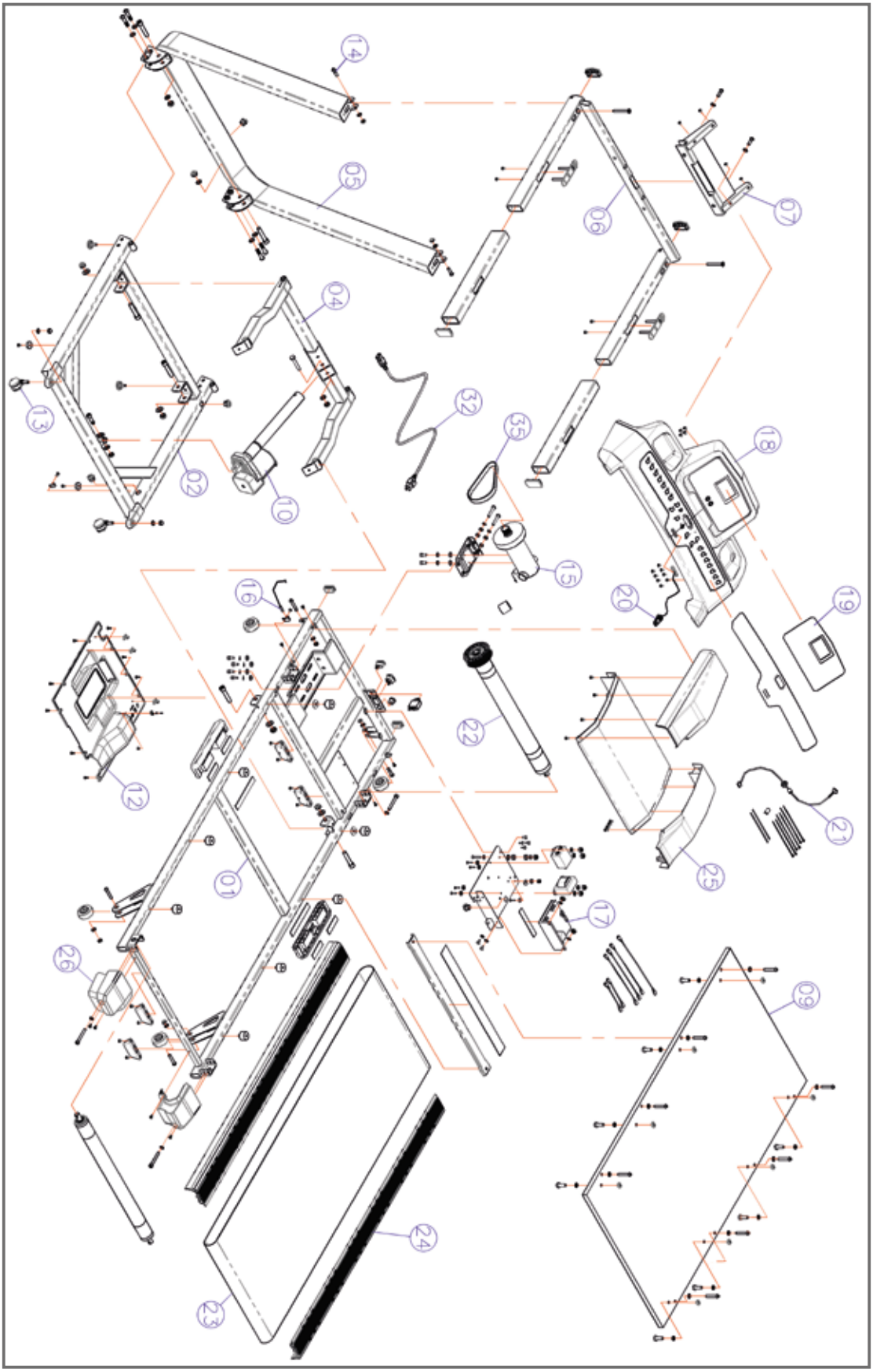

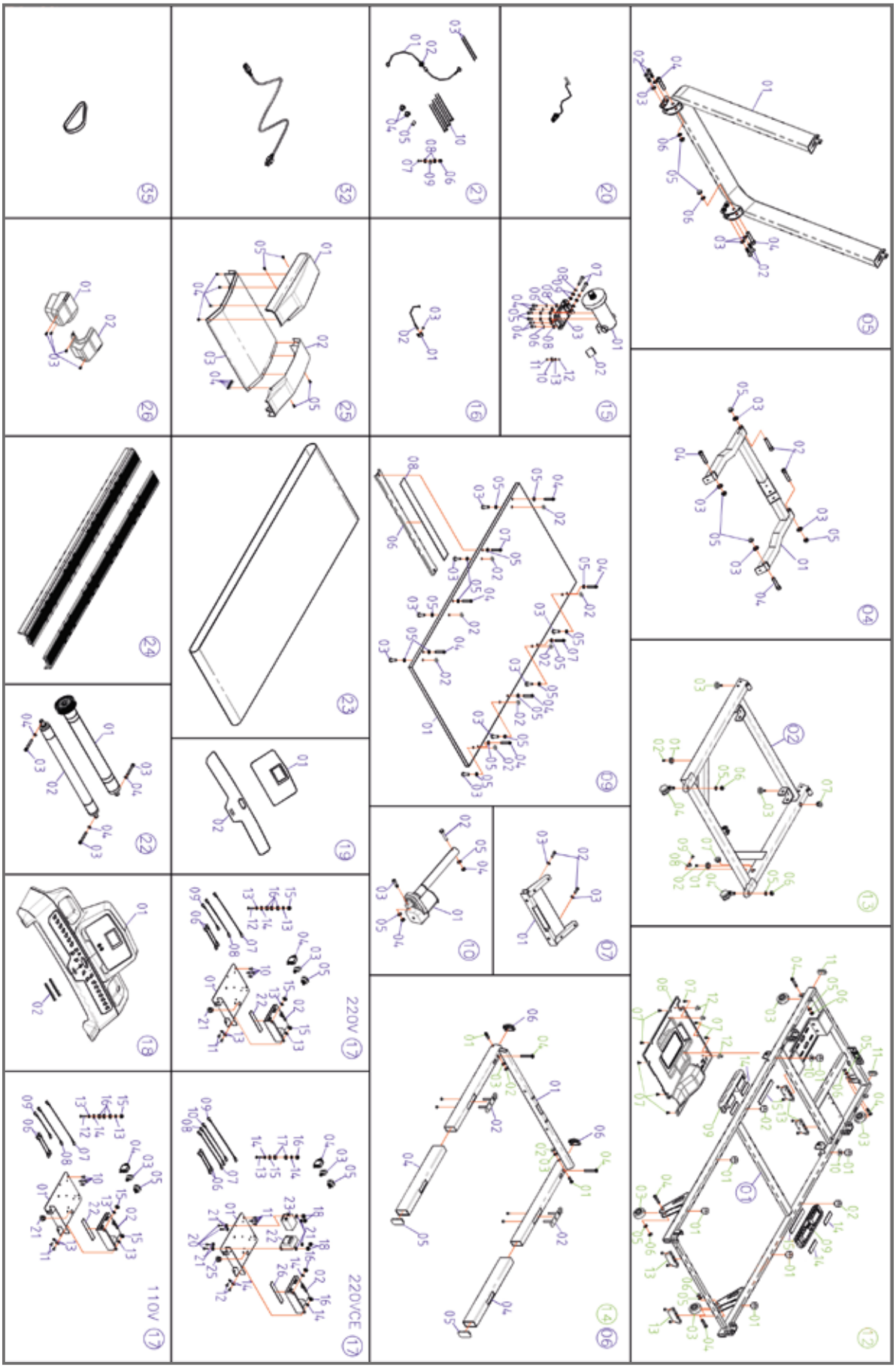
05
04
13
12
06
09
07
10
19
23
29
16
15
20
27
32
35
24
22
18
17 220V
17 220VCE
17 110V
26
25

CONTACT

Company head office
Sport-Tiedje GmbH
Flensburger Str. 55
24837 Schleswig
Germany

GENERAL INFORMATION:

DE +49 4621 4210 0
info@sport-tiedje.com

NL +31 172 619961
info@fitshop.nl

UK +44 141 876 3972
orders@powerhousefitness.co.uk

Hotline for Technical Information

DE +49 4621 4210 0
+49 4621 4210 699
service@sport-tiedje.de

NL +31 172 619961
info@fitshop.nl

UK +44 141 876 3986
support@powerhousefitness.co.uk

www.sport-tiedje.com
www.cardiostrong.de

DISCLAIMER

Product and manual are subject to change. Technical data can be changed without advance notice.

Please find a detailed overview including address and opening hours for all specialist fitness stores of the Sport-Tiedje Group in Germany and abroad on the following website.

www.sport-tiedje.com/filialen

cardiostrong

Treadmill TX40e